ZS-M1

SERVICE MANUAL

US Model
Canadian Model
AEP Model
UK Model

Model Name Using Similar Mechanism	MZ-1
Mechanism Deck Type	MT-MZ1-106
Optical Pick-up Block Type	KMS-130B

SPECIFICATIONS

MD recorder section

System	MiniDisc digital audio system
Laser diode properties	Material: GaAlAs Wavelength: λ = 780 nm Emission duration: continuous Laser output: less than 44.6 μW (This output is the value measured at a distance of 200 mm from the lens surface on the optical pick-up block.)
Revolutions	400 rpm to 900 rpm (CLV)
Error correction	Advanced Cross Interleave Reed Solomon Code (ACIRC)
Sampling frequency	44.1 kHz
Modulation system	EFM (Eight-to-Fourteen Modulation)
Number of channels	2 stereo channels
Frequency response	20 to 20,000 Hz ± 1 dB
Wow and Flutter	Below measurable limit

Radio section

Frequency range	FM: US, Canadian model 87.6 - 108MHz Italian model 87.5 - 108 MHz Other countries 87.6 - 107 MHz AM: US, Canadian model 530 - 1710KHz other countries 531 - 1602KHz
IF	FM: 10.7 MHz AM: 450 kHz
Aerials	FM: Telescopic aerial AM: Loop aerial (supplied)

General

Speaker	Full-range: 8 cm dia., cone type, 6 Ω x 2
Inputs	OPTICAL DIGITAL IN (LINE) jack: Wavelength 660 ± 30 nm LINE IN jack (stereo minijack): Sensitivity 440 mV
Outputs	Headphones jack (stereo minijack): For 32 - 64 Ω impedance headphones OPTICAL DIGITAL OUT (MD) jack: Wavelength 660 ± 30 nm LINE OUT jack (stereo minijack): Rated output 380 mV Load impedance 47 kΩ
Power output	7.5 W + 7.5 W (100 -10,000 Hz, at 6 Ω, 1% harmonic distortion)
Power requirements	For personal MD system: UK model: 240 V AC, 50 Hz European model: 220 - 230 V AC, 50 Hz US, Canadian model : 120V AC, 60Hz For remote commander: DC 3V, lithium battery (CR-2025) (1)
Power consumption	Canadian model 35W Other countries 30W
Dimensions	480 x 148 x 190 mm (w/h/d) (19 x 5 7/8 x 7 1/2 inches) incl. projecting parts
Mass	5.8 kg (12 lb 12 oz)
Supplied accessories	Mains lead (1) Remote commander (1) (RMT-CM1) AM loop aerial (1)

Design and specifications subject to change without notice.

Note
This appliance conforms with EEC Directive 87/308/EEC regarding interference suppression.

Optional accessories
Stereo Headphones: MDR-D33, MDR-D55, MDR-D77
Line Cable (stereo mini-jack ↔ stereo mini-jack): RK-G136
Optical Cable: POC-5, POC-10, POC-15, POC-DA12, POC-MZ1
Recordable MDs: MDW-60, MDW-74
Carrying Case: CK-MD4
Filing Box: CK-MD10

MICROFILM

PERSONAL MINIDISC SYSTEM

SONY®

TABLE OF CONTENTS

Section Title Page

Replacement of Antenna 4

SECTION 1. GENERAL

Looking at the Controls 5
Preparing Power Sources 7
Connecting the AM Aerial 8
Setting the Clock 8
Playing an MD (Normal Play) 9
Playing a Single Track 10
Playing Tracks in Random Order (Shuffle Play) 10
Playing Tracks in a Specific Order (Programme Play) 11
Playing Tracks Repeatedly 11
Recording from the Radio 12
Connecting Other Sound Sources 12
Recording Other Sources 13
Tips on Recording 13
Dividing Recorded Tracks 14
Combining Recorded Tracks 15
Erasing Recordings 15
Labeling Recordings (Title Function) 16
Listening to the Radio 17
Presetting Radio Stations 18
Playing Preset Radio Stations 18
Falling Asleep to Music 19
Waking Up to Music 19
Timer-Recording Radio Programmes 20
Connecting Optional Equipment 21

SECTION 2. DISASSEMBLY

2-1. Front Cabinet Assy Removal 22
2-2. Control Board Removal 22
2-3. MD Block Assy Removal 23
2-4. Main Board and Radio Board Removal 23
2-5. MD Section (MF-ZSM1-106) and IO Board Removal 24
2-6. Control Board (MD) Removal 25
2-7. Main Board (MD) Removal 25
2-8. Battery Case Removal 26
2-9. Eject Shutter Removal 26
2-10. Mechanical Deck Assy (MT-MZ1-106) Removal 27
2-11. Optical Pick-up Block (KMS-130B) Removal 28
2-12-1. Holder Assy and Main Slider Assy Removal 29
2-12-2. Holder Assy and Main Slider Assy Installation 30
2-13. Sled Motor Removal 31
2-14. Loading Motor Removal 31
2-15. Spindle Motor Removal 32

Section Title Page

SECTION 3. IC PIN FUNCTIONS

IC601 EFM/ACIR Encorder/Decorder (CXD2525R) 33
IC602 Shockproof Memory Controller (CXD2526Q) 35

SECTION 4. DIAGRAMS

4-1. Circuit Boards Location 37
4-2. Block Diagram (1) 38
4-3. Block Diagram (2) 41
4-4. Printed Wiring Boards
• Main Section 1 (Main, Decoder, Vol and Inlet board) 45
4-5. Schematic Diagrams
• Main Section 1 (Main, Decoder, Vol and Inlet board) 49
4-6. Schematic Diagrams
• Main Section 2 (Control, Control Unit , Relay, Radio, Antenna Terminal and Loop Antenna board) 53
4-7. Printed Wiring Boards
• Main Section 2 (Control, Control Unit , Relay, Radio, Antenna Terminal and Loop Antenna board) 57
4-8. Printed Wiring Boards
• Main Section 3 (IO, Filter board) 60
4-9. Schematic Diagrams
• Main Section 3 (IO, Filter board) 63
4-10. Printed Wiring Boards
• MD Section 1 (Control, CLV, Power (A), Power (B) and Power (C) board) 68
4-11. Schematic Diagrams
• MD Section 1 (Control, CLV, Power (A), Power (B) and Power (C) board) 71
4-12. Printed Wiring Boards
• MD Section 2 (Main, PTOC board) 76
4-13. Schematic Diagram
• MD Section 2 (Main (1/2) board) 81
4-14. Schematic Diagrams
• MD Section 2 (Main (2/2), PTOC board) 86
4-15. Semiconductor Lead Layouts 91
4-16. IC Block Diagrams 92

SECTION 5. EXPLODED VIEWS

5-1. Front Cabinet Assembly 95
5-2. Rear Cabinet Assembly 96
5-3. MD Block Assembly 97
5-4. Mechanism Chassis Assembly (MF-ZSM1-106) 98
5-5. Mechanism Deck Assembly-1 (MT-MZ1-106) 99
5-6. Mechanism Deck Assembly-2 (MT-MZ1-106) 100

SECTION 6. ELECTRICAL PARTS LIST 101

Laser component in this product is capable of emitting radiation exceeding the limit for Class 1.

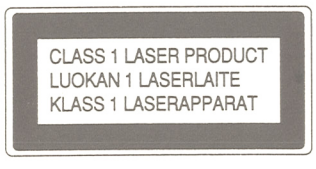

This Compact Disc player is classfied as a CLASS 1 LASER product.
The CLASS 1 LASER product label is located on the rear exterior.

SAFETY-RELATED COMPONENT WARNING!!

COMPONENTS IDENTIFIED BY MARK ⚠ OR DOTTED LINE WITH MARK ⚠ ON THE SCHEMATIC DIAGRAMS AND IN THE PARTS LIST ARE CRITICAL TO SAFE OPERATION. REPLACE THESE COMPONENTS WITH SONY PARTS WHOSE PART NUMBERS APPEAR AS SHOWN IN THIS MANUAL OR IN SUPPLEMENTS PUBLISHED BY SONY.

ATTENTION AU COMPOSANT AYANT RAPPORT À LA SÉCURITÉ!

LES COMPOSANTS IDENTIFIÉS PAR UNE MARQUE ⚠ SUR LES DIAGRAMMES SCHÉMATIQUES ET LA LISTE DES PIÈCES SONT CRITIQUES POUR LA SÉCURITÉ DE FONCTIONNEMENT. NE REMPLACER CES COMPOSANTS QUE PAR DES PIÈCES SONY DONT LES NUMÉROS SONT DONNÉS DANS CE MANUEL OU DANS LES SUPPLÉMENTS PUBLIÉS PAR SONY.

SAFETY CHECK-OUT

After correcting the original service problem, perform the following safety checks before releasing the set to the customer:

Check the antenna terminals, metal trim, "metallized" knobs, screws, and all other exposed metal parts for AC leakage. Check leakage as described below.

LEAKAGE TEST

The AC leakage from any exposed metal part to earth ground and from all exposed metal parts to any exposed metal part having a return to chassis, must not exceed 0.5 mA (500 microampers). Leakage current can be measured by any one of three methods.

1. A commercial leakage tester, such as the Simpson 229 or RCA WT-540A. Follow the manufacturers' instructions to use these instruments.
2. A battery-operated AC milliammeter. The Data Precision 245 digital multimeter is suitable for this job.
3. Measuring the voltage drop across a resistor by means of a VOM or battery-operated AC voltmeter. The "limit" indication is 0.75 V, so analog meters must have an accurate low-voltage scale. The Simpson 250 and Sanwa SH-63Trd are examples of a passive VOM that is suitable. Nearly all battery operated digital multimeters that have a 2 V AC range are suitable. (See Fig. A)

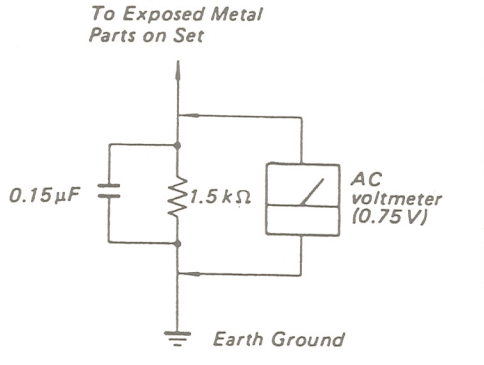

Fig. A. Using an AC voltmeter to check AC leakage.

REPLACEMENT OF ANTENNA

Antenna can be replaced without disassembling the unit.

(Removal)

1. Remove the screw on the bottom of the unit.
2. Pull off the antenna.

(Mounting)

1. Insert the antenna from the hole on the top.

※ For easy mounting, push in the second pole a little to prevent rotation.

※ Antenna may get stuck on a half way by interference with the antenna terminal board. In this case, move antenna back and forth for further insertion.

2. Meeting hole in the bottom of the unit with the bottom of the antenna, push in the antenna.

   Note: Push in the antenna completely to ensure contact with antenna terminal board.

3. Tighten the screw.

Removal

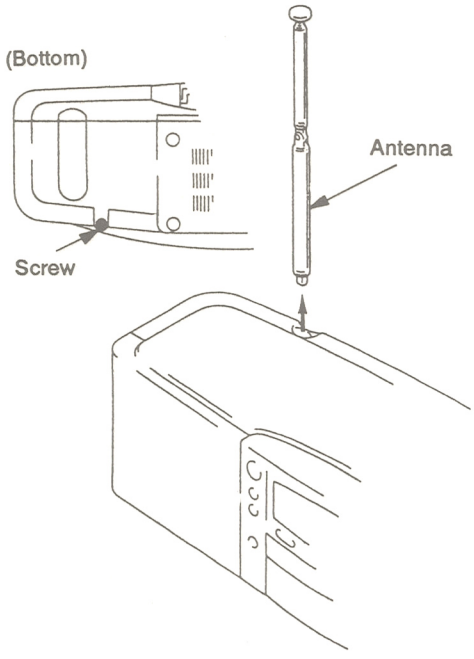

Mounting

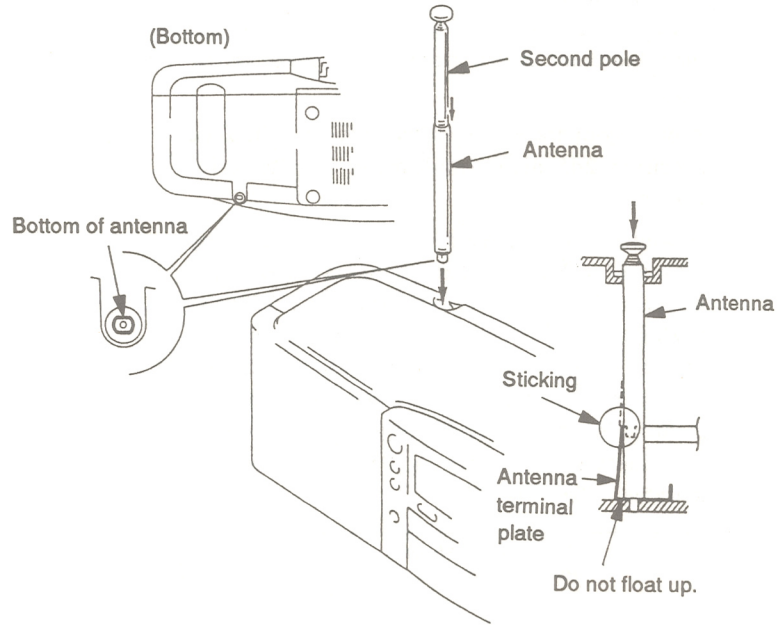

SECTION 1
GENERAL

This section is extracted from instruction manual.

Looking at the Controls

See pages in ( ) for more details.

Top panel/Front panel

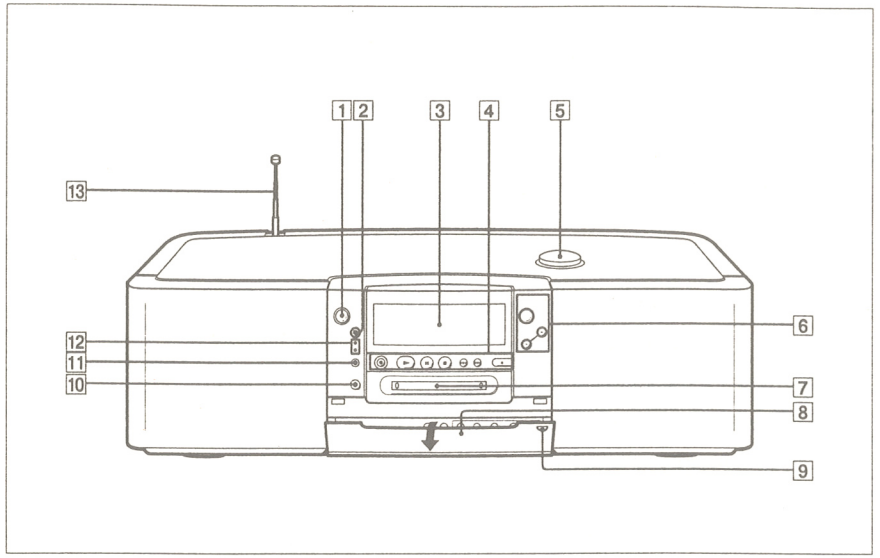

1 POWER switch

2 FUNCTION button
Press to select MD, RADIO or LINE as the source.

3 Display window *(7-E)*

4 MD operation buttons *(14, 18, 20-E)*
● Record
► Play
❚❚ Pause
■ Stop
⏮ / ⏭ AMS (Automatic Music Sensor)
⏏ Eject

5 VOLUME control

6 RADIO operation buttons
BAND *(30-E)*
PRESET *(31-E)*

7 Disc compartment *(12, 18, 20-E)*

8 Sub-control panel

9 Sub-control panel OPEN ▼ tab

10 PHONES (headphones) jack (stereo mini-jack)

11 Remote sensor

12 OPERATION and STANDBY indicators
The STANDBY indicator lights up to indicate that the player is connected to the mains. This indicator lights regardless of whether the power is on or off.

13 Telescopic aerial *(30-E)*

Behind the sub-control panel

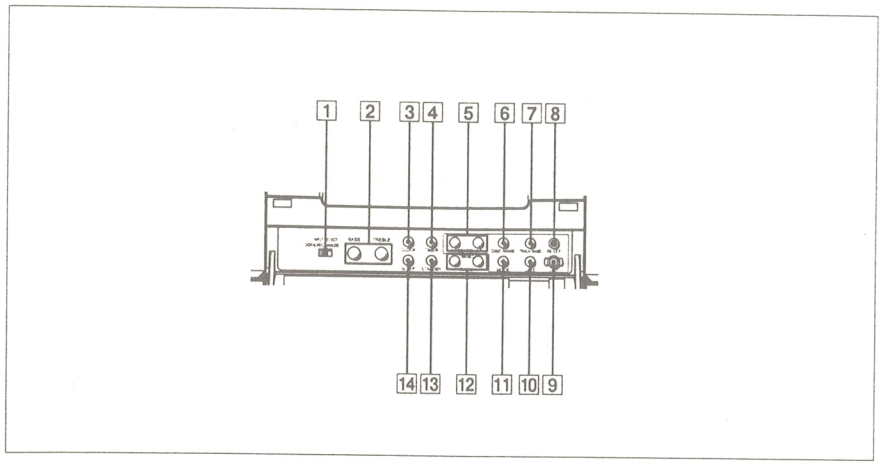

1 INPUT SELECT selector *(19-E)*

2 Tone controls
BASS (low-frequency sound)
TREBLE (high-frequency sound)

3 CLOCK button *(10-E)*

4 TIMER button *(35, 36, 37, 38-E)*

5 ◀◀ / ▶▶ SEARCH buttons *(12-E)*

6 DISC NAME button *(13-E)*

7 TRACK NAME button *(13-E)*

8 RESET button *(41-E)*
Use only to eliminate instability in microcomputer control caused by variations in power supply characteristics.

9 EDIT button *(22, 23, 24, 26, 27, 28-E)*

10 DATE button *(13-E)*

11 MODE button *(14, 15, 16, 31-E)*

12 TIME SET/TUNING buttons *(30, 31, 35, 37-E)*

13 STANDBY button *(36, 38-E)*

14 SLEEP button *(34-E)*

On the sub-control panel

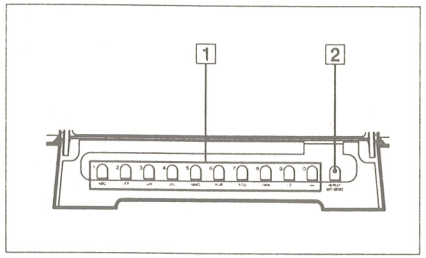

1 Numeric buttons *(11, 13, 16, 31, 36, 38-E)*

2 REPEAT/ENT/MEMO button *(11, 16, 17, 31-E)*

Rear panel

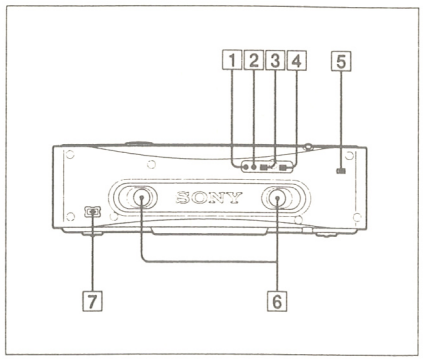

1 LINE OUT jack *(39-E)*

2 LINE IN jack *(19-E)*

3 OPTICAL DIGITAL OUT (MD) jack *(39-E)*

4 OPTICAL DIGITAL IN (LINE) jack *(19-E)*

5 AM EXT ANT (AM loop aerial) terminal *(10-E)*

6 Ducts for powerful bass sound

7 AC IN (AC power input) socket *(9-E)*

Display window

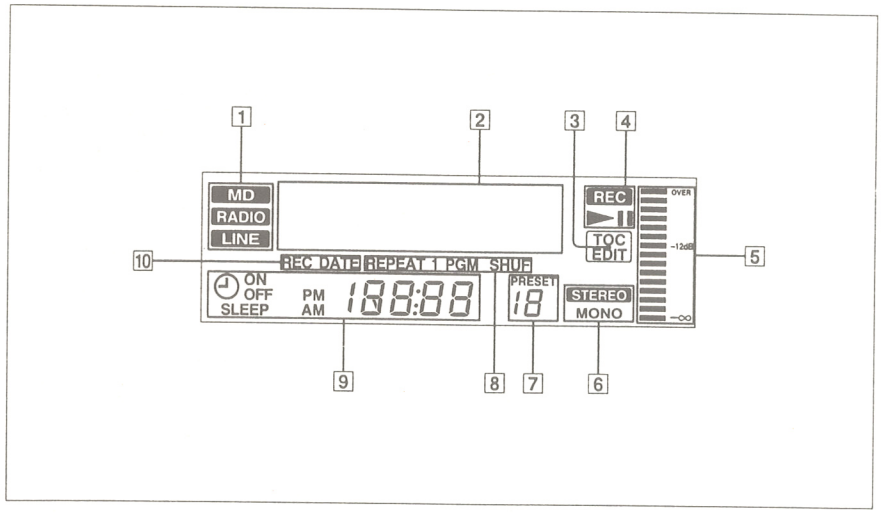

1 Function indicators
Indicates MD, RADIO or LINE as the current source.

2 Character information display
Displays the disc and track names, date and time.

3 TOC EDIT indicator
Lights up during MD recording or editing.

4 MD operation mode indicators
► indicates the MD is playing; ❚❚ indicates the MD has paused; REC indicates the MD is recording.

5 Level meter
Shows the signal level during MD recording and playback.

6 Radio mode indicator
STEREO lights up during stereo programme reception and MONO during monaural programme reception.

7 PRESET indicator
Lights up during setting or recall of preset radio stations (1 to 12).

8 Play mode indicators
1: lights during single-track play.
PGM: lights during programme play .
SHUF: lights during shuffle play.
REPEAT: lights when the repeat function is on.

9 Timer/frequency indicators
ON: Lights up with the timer-on time.
OFF: Lights up with the timer-off time.
◴ : Lights up when the timer is set.
SLEEP: Lights up when the sleep function is on.
FM•AM: Lights up with the corresponding station frequency during radio operation.

10 REC DATE/DATE indicators
REC DATE: Lights up with the recording date of the inserted MD.
DATE: Lights up with the current date.

Remote commander (card type)

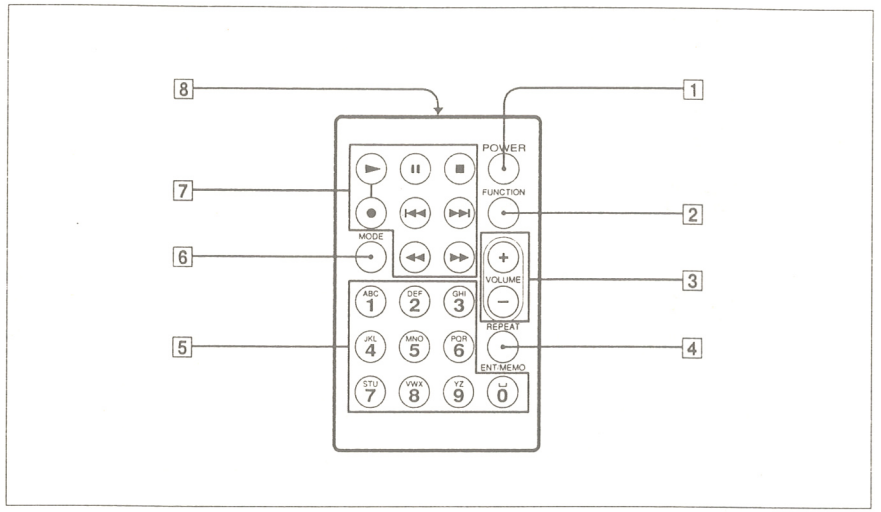

Controls on the remote commander with the same name as those on the deck have the same function.

1 POWER switch

2 FUNCTION button
Selects MD, RADIO (FM), RADIO (AM) or LINE as the current source.

3 VOLUME buttons

4 REPEAT/ENT/MEMO button

5 Numeric buttons

6 MODE button

7 MD operation buttons
► Play
II Pause
■ Stop
● Record
I◄◄ / ►►I AMS (Automatic Music Sensor)
◄◄ / ►► Search

8 Command emitter
Point toward the remote sensor on the unit.

Notes on the remote commander

- To avoid malfunction, keep the commander away from direct sunlight or strong illumination.
- See *Installing the lithium battery in the remote commander* on page 9-E for instructions on changing the battery.

Preparing Power Sources

Connecting to house current

Insert one end of the supplied mains lead into the AC IN socket located at the rear of the player ❶ and the other end into a wall outlet ❷ .

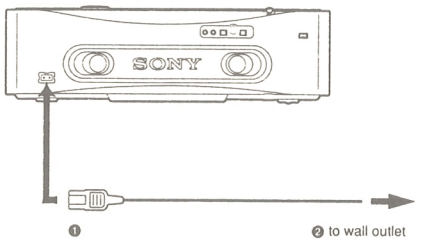

Note

Before unplugging the mains lead, be sure to turn the unit off by pressing the POWER switch. The unit will retain the previous clock (timer), MD and radio settings for about 10 minutes after you unplug the mains lead. If the unit is left unplugged for more than 10 minutes or if you failed to press POWER to turn the unit off before unplugging the mains lead, the settings and the current time and date are canceled. In this case, connect the mains lead to the wall outlet again and reenter the various settings.

Installing the lithium battery in the remote commander

Your remote commander comes with a factory installed lithium battery. When this battery becomes too weak for normal operations, replace it with a new one using the procedure below.

1 Press down on the notch with a pen tip and slide out the battery holder.

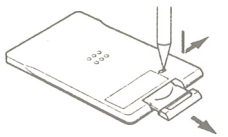

2 Install a new Sony CR-2025 lithium battery with the + (plus) side facing up.

3 Slide the holder back in.

Warning!

- Keep the lithium battery out of the reach children. Should the battery be swallowed, immediately consult a doctor.
- Wipe the battery with a dry cloth to assure good contact.
- Be sure to install the battery with the correct polarity.
- Do not hold the battery with tweezers. Doing so may cause a short-circuit.
- Do not crush the battery or dispose of it in a fire. Doing so may cause it to explode. Carefully dispose of the used battery.

Connecting the AM Aerial

To receive AM stations, connect the AM loop aerial using the procedure below.

1 Prepare the aerial as shown below.

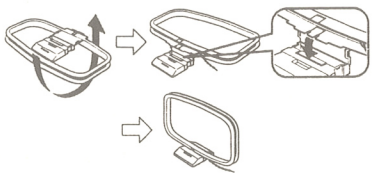

2 Connect the aerial to the AM EXT ANT terminal.

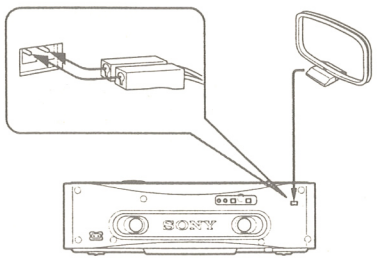

Note

To minimize noise interference from the player section, locate the AM loop aerial away from the player during AM programme reception.

Setting the Clock

In order to use the time and date stamp function for MD recordings, use the procedure below to set the system clock.

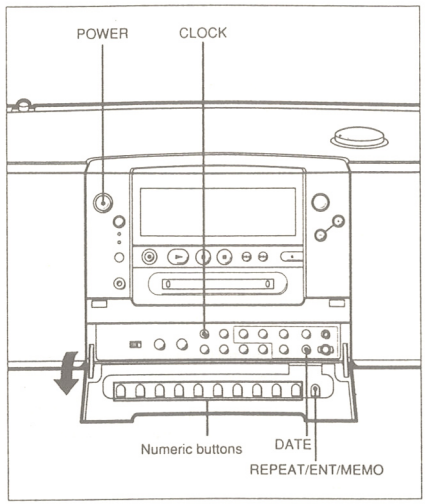

1 Press POWER.
Press FUNCTION to select MD or LINE.
(The clock cannot be set when RADIO is selected.)

2 Keep pressing CLOCK for about 4 seconds.
The first digit of the year flashes.

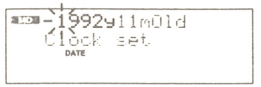

3 Enter the current year by pressing the numeric buttons.
For example, to enter the year 1993, press 1, 9, 9 and 3.

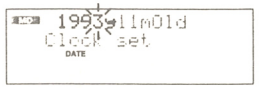

4 Press REPEAT/ENT/MEMO.
The year is stored in memory and the first digit of the month flashes.

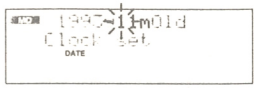

5 Repeat steps **3** and **4** and enter the current month and day.
In case of single-digit months or days, enter 0 first, then the corresponding digit.
After the day is stored in memory, set the time.

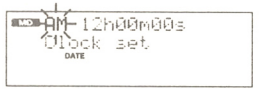

6 Choose either AM or PM by pressing DATE, then press REPEAT/ENT/MEMO.
The first digit of the hour begins flashing.

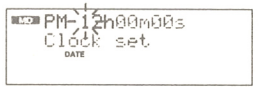

7 Enter the hour, then the minutes as you did for the month and day in steps **3** and **4**.
Pressing REPEAT/ENT/MEMO after the minutes setting starts the operation of the clock.

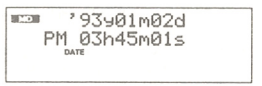

If you make a mistake while setting the time and date
Press ■, then start again from the step **2**. To skip items that do not require resetting, press TIME SET (+) and REPEAT/ENT/MEMO until the desired item begins flashing.

To display the current date
Press DATE in stop mode. The date display is canceled after 10 seconds or when you press DATE again. However, the current date cannot be displayed when RADIO is selected.

To display the time using a 24-hour system
Press DATE in stop mode to display the time, then press REPEAT/ENT/MEMO. You can set the clock using the 24-hour system as well. However, the current date cannot be displayed when RADIO is selected.

Playing an MD (Normal Play)

Follow the procedure below to listen to an MD.

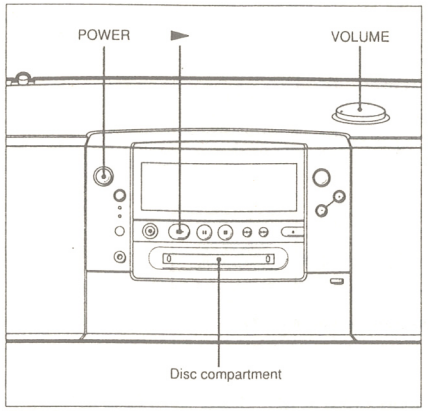

1 Press POWER.
You can also turn the player on by inserting an MD or pressing ►.

2 With the label side up and the arrow pointing toward the opening, slide the MD into the disc compartment until the recorder grips it.

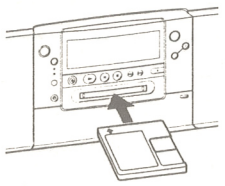

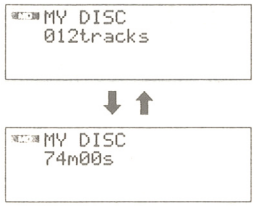

3 Press ►
The MD starts playing.

To	Press
Search backward	◄◄
Search forward	►►*
Interrupt play momentarily	II
Resume play after pause	II
Stop play	■
Eject the MD	≙

* "End!" flashes when the disc reaches its end. Press ■ or ◄◄ to turn off the indicator.

Note on sound volume
Compared to analog systems, the low noise level of the MD system makes it hard to gauge the sound volume when the signal level is very low. To prevent the unexpected output of high-volume sound, adjust the volume gradually from a low level.

Locating the beginning of a track (AMS*)

Use the AMS buttons to quickly find the beginning of a track while the MD is playing or in pause mode.

To find	Press
The beginning of the current or preceding tracks	⏮
The beginning of the next or succeeding tracks	⏭

Holding down either AMS button in playback or pause mode causes the unit to skip to the start of each successive track until either the button is released or the last track reached. When the button is released, the unit begins playback of the displayed track or enters pause mode, depending on the original mode.

* AMS: Automatic Music Sensor

Specifying a track directly

You can quickly find specific tracks during playback by directly specifying the track number using the numeric buttons.

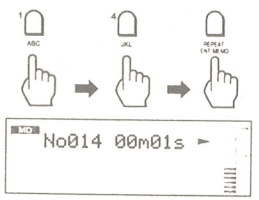

Enter the desired track number by pressing the numeric buttons, then press REPEAT/ENT/MEMO.

If the PGM indicator in the display window is on
Press MODE to turn off the indicator.

Displaying disc and track names

By pressing the DISC NAME, TRACK NAME or DATE button when an MD is playing or in pause mode, you can display the respective label information recorded on that MD. The previous display appears again after 10 seconds have passed or when you press the button again.

To display	Press
The name of MD	DISC NAME
The name of the current track	TRACK NAME
The recording date and total recorded time (if not a premastered MD)	DATE

Notes
- Nothing is displayed if no information has been recorded on the MD (premastered or recorded).
- Pauses during the recording of a track are not included in the total recording time displayed during playback.

When label information exceeds the displayable length
The display window can show only 12 characters at a time. To see a title of 13 characters or more, hold down the button and the title will scroll from the 13th character on. After scrolling, the first 12 characters are displayed again.

Playing a Single Track

Use the following procedure to play back a single track once.

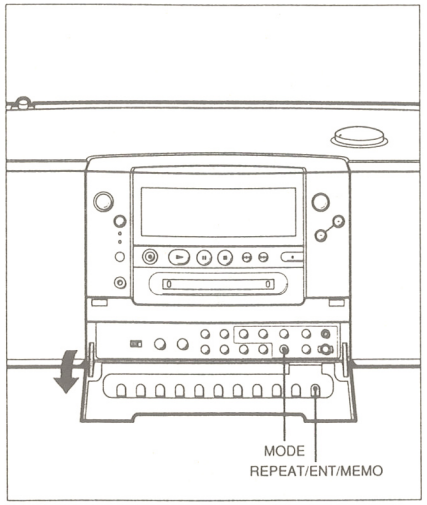

Press MODE until "1" goes on.

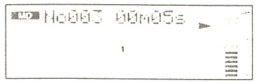

The unit stops after the selected track has finished. If "REPEAT" is also lit in the display window, the track will play continuously. (See *Playing Tracks Repeatedly* on page 17-E.)

To cancel single-track play
Press MODE until "1" goes off.

To stop single-track play
Press ■.

Quick guide to playing mode selection
The mode and display window changes in the following order each time you press MODE or REPEAT/ENT/MEMO:

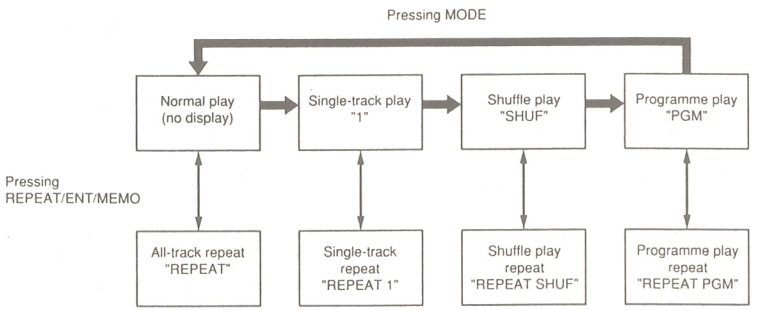

Playing Tracks in Random Order (Shuffle Play)

Use shuffle play to play back all tracks on an MD in random order.

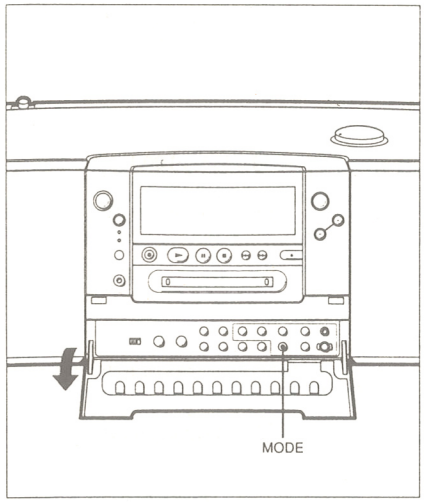

While the MD is playing, press MODE until "SHUF" appears in the display window.
If "REPEAT" is on, press REPEAT/ENT/MEMO to turn it off.
Shuffle play will start after the current track finishes. The word "access" flashes while shuffle play searches for the next track to play.

To cancel shuffle play
Press MODE until "SHUF" goes off.

To stop shuffle play
Press ■.

Note
When you press ⏮, the MD returns to the beginning of the current track only.

Playing Tracks in a Specific Order (Programme Play)

Programme play allows you to specify the playback order of up to 21 tracks.

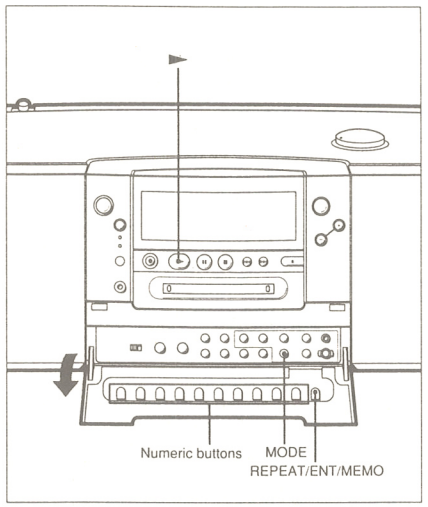

1 While the MD is playing, press MODE until "PGM" flashes in the display window.
If "REPEAT" is on, press REPEAT/ENT/MEMO to turn it off.
The MD will continue to play as you enter the desired track numbers.

2 Enter the desired track number using the numeric buttons.
For example, to enter the 12th track, press 1 and 2.

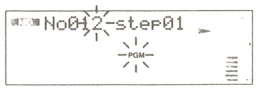

3 Press REPEAT/ENT/MEMO.
The entered track number is programmed.

4 Repeat steps **2** and **3** within 10 seconds to enter other track numbers up to 21 tracks.
If no button is pressed within 10 seconds, programme mode is automatically canceled.

5 Press REPEAT/ENT/MEMO within 10 seconds after step **4**.
The first track number of the new programme appears.
If necessary, verify the track numbers and make corrections *(see page 17-E)*. If information from the previous programme is found, press 0, then REPEAT/ENT/MEMO to erase all old track numbers.

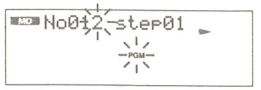

6 Press ► (play) within 10 seconds after step **5**.
Programme play starts from the first track of the programme.

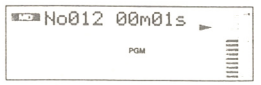

Checking the order of entered tracks
With "PGM" on and prior to playback, press REPEAT/ENT/MEMO to display each track number of the programme in sequence. After all track numbers have appeared, the programme cycles back to the first track number.
(In the diagram below, track numbers 6, 2 and 9 have been programmed.)

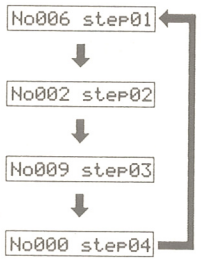

(No track numbers were entered after step **3**.)

To change a track in the programme
During track number verification (see *Checking the order of entered tracks* above), you can freely modify any track number merely by entering the new number with the numeric buttons, then pressing REPEAT/ENT/MEMO to save it.

To cancel programme play
Press MODE until "PGM" goes off. The programme remains in memory until the MD is ejected or for about 10 minutes after unplugging the mains lead (see *Note* on page 9-E).

To stop programme play
Press ■ (stop).

Note
You cannot programme more than 21 tracks. After the 21st step, the programme cycles back to the first step and any new entries will sequentially replace previously programmed track numbers starting from step one.

Playing Tracks Repeatedly

The repeat function can be used for repeated playback in normal, single track, shuffle or programme play mode.

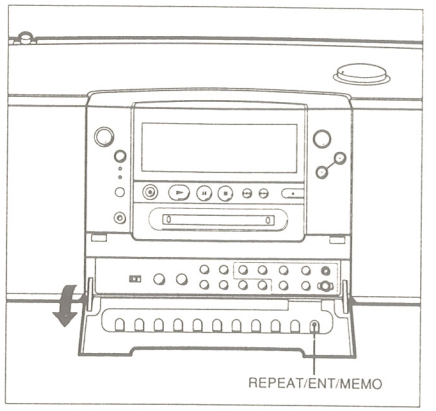

While the MD is playing, press REPEAT/ENT/MEMO until "REPEAT" goes on.

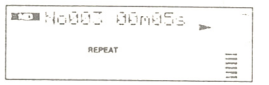

Playing mode	When "REPEAT" is on
Normal play	All the tracks are played again.
Single track play	The same track is played repeatedly.
Shuffle play	Shuffle play repeats with a different track order each time.
Programme play	The programme plays repeatedly.

To cancel the repeat function
Press REPEAT/ENT/MEMO until "REPEAT" goes off.

To stop repeated playback
Press ■ (stop).

Recording From the Radio

With your MiniDisc unit you can record from the radio in a digital format. For this you must use a recordable MD (see *What Is a MiniDisc?* on page 44-E).

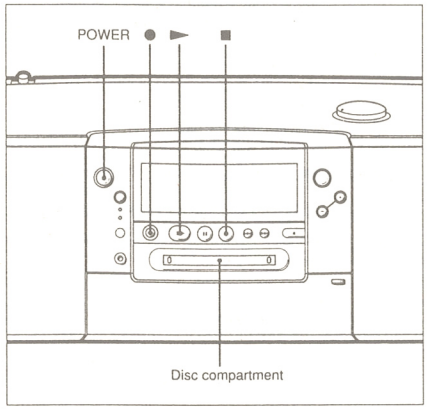

1 Press POWER.

2 With the label side up and the arrow pointing toward the opening, slide the MD into the disc compartment until the unit grips it.
The disc name (if labeled) appears on the first line while the total number of recorded tracks and the recording time alternately appear on the second line.

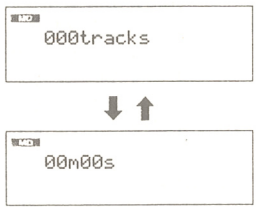

3 Press BAND to select the band and TUNING (-/+) to select the station. (For details on tuning, see *Listening to the Radio* on page 30-E.)

4 While pressing ● (record), press ► (play).
● (record) goes on and recording starts with the recording level automatically adjusted.

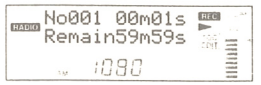

5 Press ■ (stop) when you want to stop recording.
"TOC* EDIT" begins to blink. After ● (record) goes off, ● (record) goes on again. After about a second, "TOC EDIT" and ● (record) go off and the recording is completed. Wait until "TOC EDIT" goes off to perform another operation.
The next recording to be performed begins on a new track on the MD.

Caution
Do not jog the unit or pull out the mains lead while "TOC EDIT" is flashing.

To	Press
Pause	II
Cancel pause	II
Eject the MD	⏏

* The TOC (Table of Contents) contains the beginning and ending addresses of all tracks on the MD.

Locating a desired point during playback
Adding a track mark at a desired point during recording *(see page 21-E)* will allow you to quickly locate that point later during playback.

Note on recording AM stations
To record AM stations with less noise, adjust the direction of the supplied AM loop aerial or locate the aerial away from the player.

Connecting Other Sound Sources

Before you can record from other sound sources, you must connect the unit to a sound source. The sound source can be one of two types: a digital source (such as another MD player, CD player or digital amplifier) or an analog source (such as a cassette player, radio or analog amplifier).

Hooking up a digital source

1 Use a POC-5 optical cable (not supplied) to connect a digital source to the OPTICAL DIGITAL IN (LINE) jack.

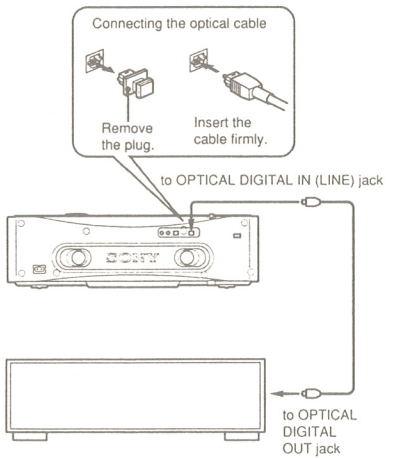

2 Set INPUT SELECT behind the sub-control panel to DIGITAL (REC).

Notes on MD recording
- You cannot use the digital input jack (OPTICAL DIGITAL IN) to record digital sources with a sampling frequency different from that of the MD section (such as DAT (32 kHz, 48 kHz) or BS). In these cases, use the analog input jack (LINE IN) as described in the following section *Hooking up an analog source*.
- Do not touch the terminals of the optical cable since contamination from the fingers may interfere with the signal output.
- Since your MD unit uses SCMS (Serial Copy Management System), MDs recorded through the digital input jack (OPTICAL DIGITAL IN) cannot be used to make subsequent copies to other MDs. Copies of home-recorded MDs can only be made through the analog output jack (LINE OUT).

Hooking up an analog source

1 Connect an RK-G136 (not supplied) to connect an analog source to the LINE IN jack.

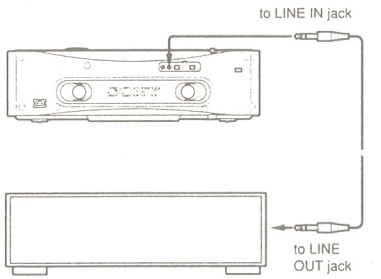

2 Set INPUT SELECT behind the sub-control panel to ANALOG.

Recording Other Sources

You can record digital or analog sources connected to your unit *(see page 19-E)* to a recordable MD (see *What Is a MiniDisc?* on page 44-E).

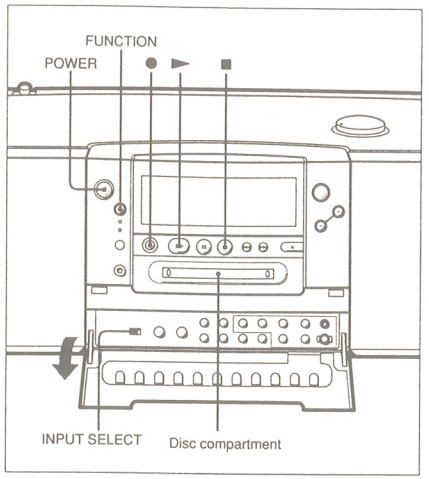

1 Press POWER.

2 With the label side up and the arrow pointing toward the opening, slide the MD into the disc compartment until the unit grips it.
The disc name (if labeled) appears on the first line while the total number of recorded tracks and the recording time alternately appear on the second line.

3 Press FUNCTION to select "LINE."

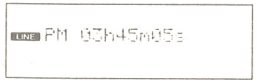

4 Set INPUT SELECT to match the respective sound source type.

For sound sources with	Set INPUT SELECT to
An OPTICAL DIGITAL OUT jack	DIGITAL
A LINE OUT jack	ANALOG

Note
When using OPTICAL DIGITAL IN to record a source, sound monitoring is not possible in the recording stop mode.

5 While pressing ● (record), press ► (play).
● (record) goes on and recording starts with the recording level automatically adjusted.

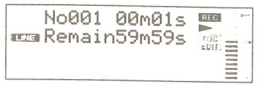

6 Play the sound source to be recorded.

7 Press ■ (stop) when you want to stop recording.

"TOC* EDIT" begins to blink. After ● (record) goes off, ● (record) goes on again. After about a second, "TOC EDIT" and ● (record) go off and the recording is completed. Wait until "TOC EDIT" goes off to perform another operation.
The next recording to be performed begins on a new track on the MD.

Caution
Do not jog the unit or pull out the mains lead while "TOC EDIT" is flashing.

To	Press
Pause	❚❚
Cancel pause	❚❚
Eject the MD	⏏

* The TOC (Table of Contents) contains the beginning and ending addresses of all tracks on the MD.

Recording a CD or premastered MD through OPTICAL DIGITAL IN
To record track numbers in the same sequence as the original, CDs or premastered MDs should only be played in normal play mode — not shuffle or programme play mode.

Note on recording character information
When using OPTICAL DIGITAL IN to record a source, track numbers are automatically recorded in the same sequence as the original; however, no character information (disc or track names) are recorded.

Tips on Recording

Starting a recording precisely

1 Within 4 seconds after pressing ❚❚ (pause), press ► (play) while holding down ● (record). The unit enters recording pause mode.

2 Play the sound source to be recorded.

3 When you come to the part you want to record, press ❚❚ (pause) again.

Track marking during recording

Track marking is essentially the adding of tracks during recording. By adding a track mark (new track number) at desired points, you can quickly locate those points afterwards using the AMS function. This is especially useful for separating material recorded from the radio through the analog input jack (LINE IN), or for adding additional tracks to those recorded from CDs or other MDs through the digital input jack (OPTICAL DIGITAL IN).

While recording, press REPEAT/ENT/MEMO.
The track number increments by one, and material recorded from that point is placed on that track.

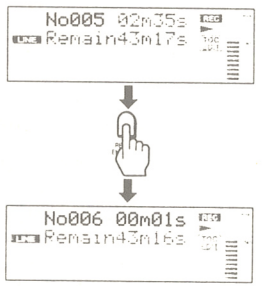

To protect a MiniDisc against accidental erasure

Open the slot to disable recording.
Close the slot to enable recording.

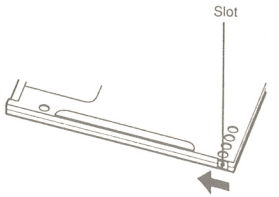

To disable recording, slide the tab in direction of arrow.

Dividing Recorded Tracks

The MD unit records analog sources through the analog input (LINE IN) as a single track on the MD. To randomly access individual songs or portions on this track, separate tracks must be designated for each song or portion, as shown in the illustration below.

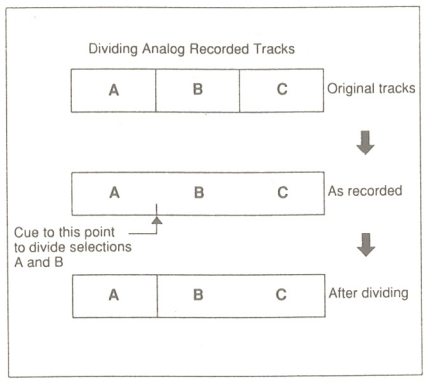

1 While the MD is playing, press ❚❚ (pause) at the division point.

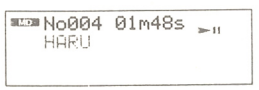

2 Press EDIT until "Divide" goes on.

The display changes in the following order: Combine, Divide, Erase, Disc name, Track name, then back to Combine.

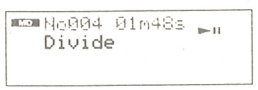

3 Press REPEAT/ENT/MEMO.

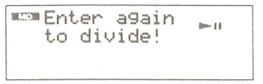

4 Press REPEAT/ENT/MEMO again to confirm your choice.
Pause is released and the new track starts playing. The track number in the display increments by one and the playing time of the new track appears.
The track title of the original track is assigned to the new track.

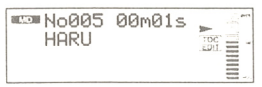

5 Repeat steps **1** to **4** until you have made all the desired divisions.

6 Press ■ (stop).

"TOC EDIT" flashes while the new TOC data is written to the MD. After about a second, "TOC EDIT" goes off and track division is completed.

Caution
Do not jog the unit or pull out the mains lead while "TOC EDIT" is flashing.

To cancel the track division procedure
Press ■ (stop) prior to step **4**.

If you make a mistake
Combine the tracks again (see *Combining Recorded Tracks* on page 24-E), then redivide the tracks.

Changing the order of consecutive tracks

Use the procedure below to switch the order of two consecutive tracks.

1 Play the second track of the two you want to switch.
For example, to switch tracks 1 and 2, play track 2.

2 While the MD is playing, hold down ► (play) and press EDIT until "Swap" goes on.

3 Press REPEAT/ENT/MEMO.
"Enter again to swap!" goes on and play is paused.

4 Press REPEAT/ENT/MEMO again to confirm the switch.
The order of the two tracks switches and play resumes.

5 Press ■ (stop).
"TOC EDIT" flashes while the TOC is updated. After about a second, "TOC EDIT" goes off and the switch is completed.

To cancel the swapping procedure
Press ■ (stop) prior to step **4**.

Combining Recorded Tracks

Digital sources input through the OPTICAL DIGITAL IN jack (such as CDs and other MDs) are recorded to the MD with all the track divisions of the original. The combine function allows you to combine consecutive tracks on a recorded MD *(see illustration below)* to eliminate undesired track divisions or correct mistakes made during track division *(see page 22-E)*.

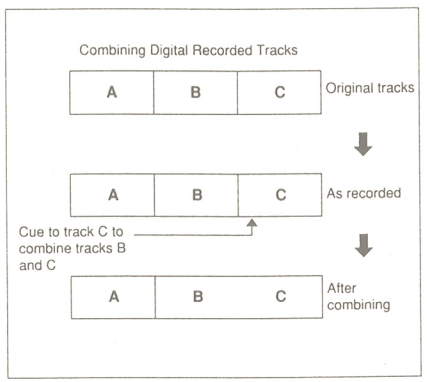

1 Play the second track of the two you want to combine.

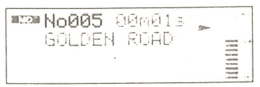

2 Press EDIT until "Combine" appears.
The display changes in the following order: Combine, Divide, Erase, Disc name, Track name, then back to Combine.

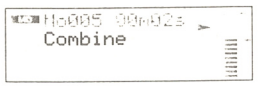

3 Press REPEAT/ENT/MEMO.
"Enter again to combine!" goes on and play is paused.

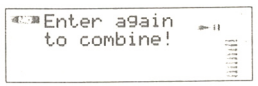

4 Press REPEAT/ENT/MEMO again to confirm the combination.
The two tracks are combined and play resumes. The display shows the first of the two track numbers and the combined time of both tracks.

5 Press ■ (stop).
"TOC EDIT" flashes while the TOC is updated. After about a second, "TOC EDIT" goes off and the track combination is completed.

Caution
Do not jog the unit or pull out the mains lead while "TOC EDIT" is flashing.

To cancel the track combination procedure
Press ■ (stop) prior to step **4**.

If you make a mistake
Divide the tracks again (see *Dividing Recorded Tracks* on page 22-E), then recombine the tracks.

Note
After two tracks have been combined, the recording date and the track title of the first track become the effective recording date and track title of the combined track.

Erasing Recordings

If your recorded MD has been divided into tracks, you can use the procedure below to erase specific tracks easily and instantly. Note, however, that once erased, a track cannot be recovered.

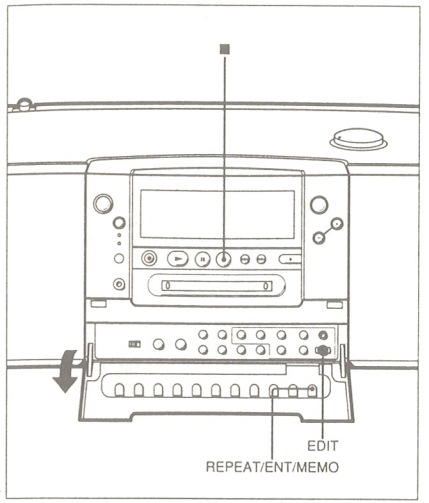

1 Play the track you want to erase.

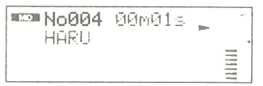

2 Press EDIT until "Erase" goes on.
The display changes in the following order: Combine, Divide, Erase, Disc name, Track name, then back to Combine.

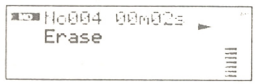

3 Press REPEAT/ENT/MEMO.
"Enter again to erase!" goes on and play pauses.

4 Press REPEAT/ENT/MEMO again to confirm the erasure.
The designated track is erased, and the remaining tracks are renumbered. The track following the one just erased starts playing.
If the erased track is the last one on the MD, the unit enters pause mode at the end of the previous track.

5 Press ■ (stop).
"TOC EDIT" flashes while the TOC is updated. After about a second, "TOC EDIT" goes off and the erasure is completed.

Caution
Do not jog the unit or pull out the mains lead while "TOC EDIT" is flashing.

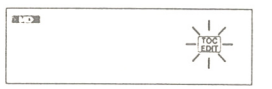

To cancel the erasure procedure
Press ■ (stop) prior to step **4**.

Erasing a part of a track

1 Follow the procedure on page 22-E *(Dividing Recorded Tracks)* to create a track division at the starting and ending points of the portion to be erased.

2 Follow the procedure on page 25-E *(Erasing Recordings)* to erase the selected portion.

3 Follow the procedure on page 24-E *(Combining Recorded Tracks)* to join the portions before and after the erased portion.

Erasing a disc

Erasing a recordable MD deletes all recorded tracks and disc names.

1 While the MD is playing, hold down ► (play) and press EDIT until "Swap" goes on.

2 Press EDIT again.
"Be careful! Erase all" goes on.

3 Press REPEAT/ENT/MEMO.
"Enter again to erase all" goes on and play is paused.

4 Press REPEAT/ENT/MEMO.
"TOC EDIT" flashes while the TOC is updated. After about a second, "TOC EDIT" goes off and the erasure is completed.

To cancel the erasing procedure
Press ■ (stop) prior to step 4.

Labeling Recordings (Title Function)

Use the title function to create titles for your recorded discs and tracks. Titles — which may consist of uppercase letters, numbers and spaces — appear in the display window during MD operation.

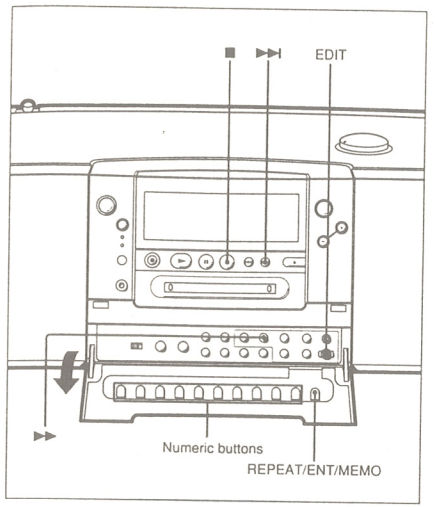

1 Press ► (play).
To label an MD, play any track on the MD.
To label a track, play the track to be labeled.

2 Press EDIT to select either "Disc name" or "Track name."

The display changes in the following order: Combine, Divide, Erase, Disc name, Track name, then back to Combine.

To label an MD
Press EDIT until "Disc name" goes on. Repeat play of all tracks begins automatically.

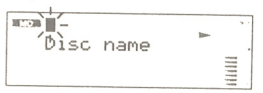

To label a track
Press EDIT until "Track name" goes on. Repeat play of a single track begins automatically.

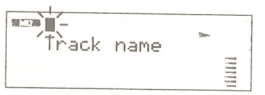

3 Press the numeric buttons to enter the desired characters. Since each button is used to input up to 4 characters, press the button once to enter a number, and twice, three or four times to enter a letter. For example, press numeric button 5 twice to enter "M".

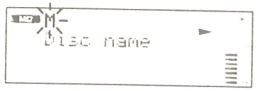

4 Press ▶▶| (AMS) or ▶▶ (SEARCH) to move to the next letter.
If you make a mistake, press |◀◀ (AMS) or ◀◀ (SEARCH), then enter the correct letter. To erase a letter, enter a space (␣) by pressing 0 twice.

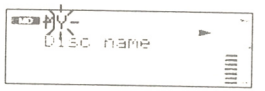

5 Repeat steps 3 and 4 until you have entered the entire title using a maximum of 21 characters.

6 Press REPEAT/ENT/MEMO.
Play pause and the title you entered appears on the second line.

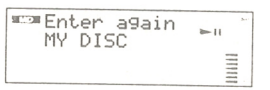

(Continued on next page.)

(Continued from previous page.)

7 Press REPEAT/ENT/MEMO again to confirm the title.
Pause is cancelled, the title you entered is displayed for about 10 seconds, and the display returns to normal.
If you enter more than 12 characters, the display scrolls once, then displays the first 12 characters again.

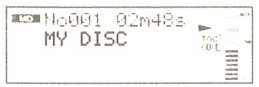

8 Press ■ (stop).
"TOC EDIT" flashes while the TOC is updated. After about a second, "TOC EDIT" turns off and the labeling procedure is completed.

Caution
Do not jog the unit or pull out the mains lead while "TOC EDIT" is flashing.

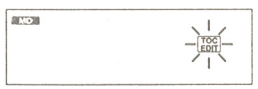

To cancel the labeling procedure
Press ■ (stop) prior to step **7**.

Making a correction after entering a title
If you pressed REPEAT/ENT/MEMO in step **7** but wish to make a correction, repeat the labeling procedure from step **2**.

Listening to the Radio

Follow the procedure below to tune in FM or AM broadcasts.

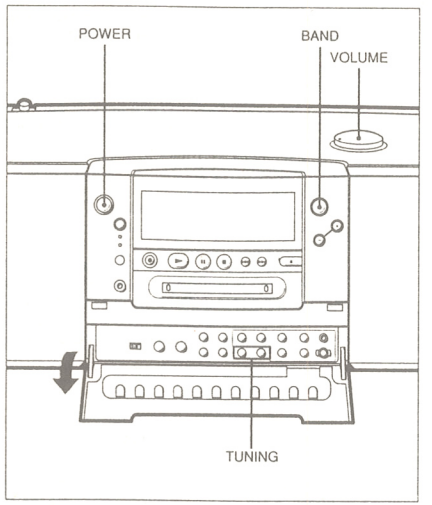

1 Press POWER.
You can also turn the player on by pressing BAND.

2 Press BAND to select FM or AM.
"RADIO" turns on and the band changes each time you press the button.

3 Tune in a radio station.
Press either the TUNING - or + button until the frequency display begins changing. The Auto Scan function searches for, then locks onto the next strong signal. Continue pressing the button until you find the desired station.

To	Press
Turn off the radio	POWER
Listen to FM	MODE to display "STEREO".
Reduce FM noise	MODE to display "MONO". The noise will be reduced, but the radio will play in monaural.

To improve broadcast reception
Reorient the aerial.

FM

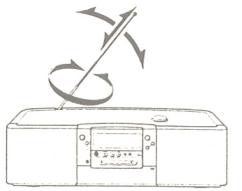

AM

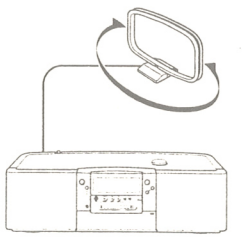

Note
To minimize noise interference from the player section, locate the AM loop aerial away from the player during AM programme reception.

Presetting Radio Stations

Presetting your favorite radio stations allows you to quickly tune them in merely by pressing PRESET on the unit or the numeric buttons on the remote commander. The reception mode (stereo or monaural) can also be stored for each preset station.

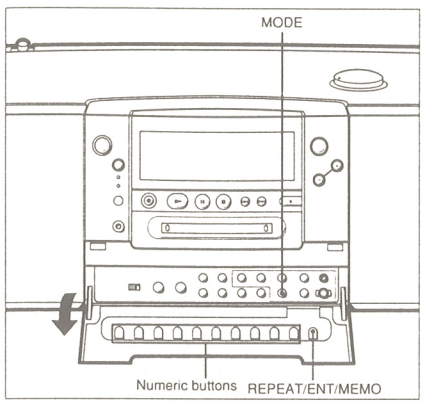

1 Press BAND to select AM or FM, then press the TUNING buttons to tune in the desired station.

2 Press REPEAT/ENT/MEMO for about 2 seconds.
"PRESET" and a preset number start flashing. The radio station will be stored under the displayed number.

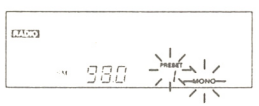

3 Press the numeric buttons to enter another preset number, if desired.
For example, to set 10, press numeric button 1, then 0. You may also press PRESET to increment the preset number display. Up to 24 stations, 12 each for AM and FM, can be stored.

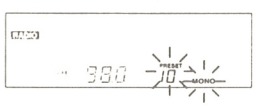

If you enter the wrong number, press the numeric buttons again to enter the correct number.

4 Press MODE to select the reception mode to be stored.

Reception mode	Indication
Stereo	STEREO
Monaural	MONO

5 Press REPEAT/ENT/MEMO.
"PRESET" and the preset number stop flashing and remain on.

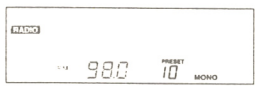

Note
Radio stations cannot be preset during the recording of radio programmes.

Playing Preset Radio Stations

Press PRESET on the unit or the numeric buttons on the remote commander to call up stations by their preset number.

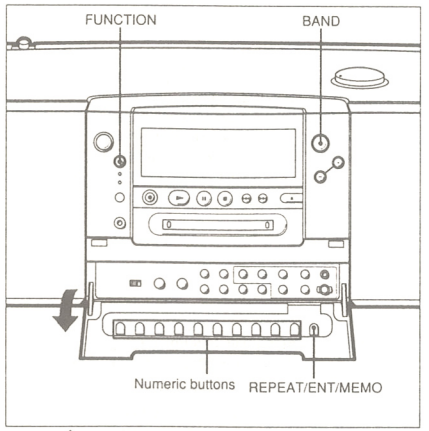

1 Press BAND or FUNCTION to turn on the RADIO indicator.

2 Enter the desired preset number by pressing the numeric buttons.
For example, to select 10, press numeric button 1, then 0. You may also press PRESET to increment the preset number display.

If you enter the wrong number, press the numeric buttons again to enter the correct number.

3 Press REPEAT/ENT/MEMO.
The selected preset radio station begins playing in the specified reception mode.

To erase a preset station
Storing a new station to a previously used preset number will erase the old station and replace it with the new one.

Falling Asleep to Music

The timer can be set to turn off the system after a lapse of 10, 30, 60, 90 or 120 minutes, allowing you to fall asleep while listening to a desired sound source.

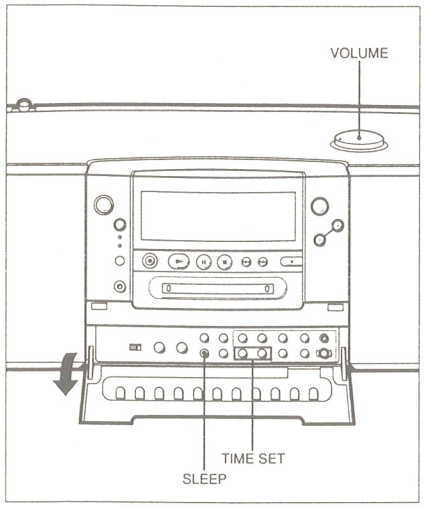

1 Select the desired sound source by pressing FUNCTION then start playing the selected sound source.

2 Press SLEEP.

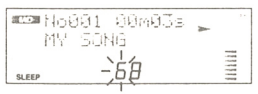

3 Within 4 seconds after pressing SLEEP, select the desired time duration by pressing TIME SET (+ or -). Each press of the TIME SET (+) button changes the time duration as follows:

10 → 30 → 60 → 90 → 120

After 4 seconds, the time duration is replaced by the previous display and the sleep function activates. At this time, the back-lighting stays off even with the power on.

To cancel the sleep function

Press SLEEP to turn off the SLEEP indicator, or turn off the power.

To fall asleep with one programme and wake up with another

Set the programme to be activated when the timer goes on using the procedure on page 35-E *(Waking Up to Music)*, then perform the procedure for the sleep function.

Waking Up to Music

The wake up function turns the system on automatically at a specified time to wake you up with a preselected programme.

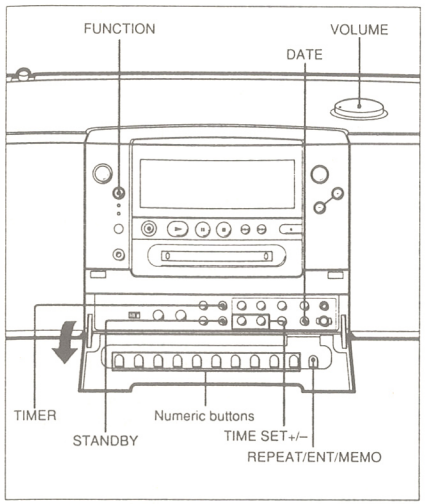

Before you start...

- Verify that the clock is set correctly. (If not, reset it using the procedure *Setting the Clock* on page 11-E.)
- Verify that the ◴ indication is off. (If not, press STANDBY to turn it off.)

1 Select the desired sound source.

Sound source	Preparation
MD	Insert a disc.
Radio	Tune in the desired station.
Other components connected through the LINE IN jack	Turn on the power of the selected component.*

* For details, see the operation manual of the respective component.

2 Press TIMER until "Pb" and ◴ (or "REC" and ◴) goes on.
If "REC" goes on, press TIME SET (+ or -) to change it to "Pb".

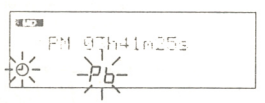

3 Press REPEAT/ENT/MEMO.

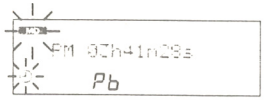

4 Select the desired sound source by pressing FUNCTION or TIME SET (+ or -).

Sound source	Indication
MD	MD
Radio	RADIO
Other components connected through the LINE IN jack	LINE

5 Press REPEAT/ENT/MEMO.
"ON" goes on.

6 Set the timer-on time.

1 Press DATE to select AM or PM, then press REPEAT/ENT/MEMO.

2 Enter the hour with the numeric buttons, then press REPEAT/ENT/MEMO to store it.

(Continued on next page.)

(Continued from previous page.)

3 Enter the minutes with the numeric buttons, then press REPEAT/ENT/MEMO to store the timer-on time.
"OFF" goes on next.

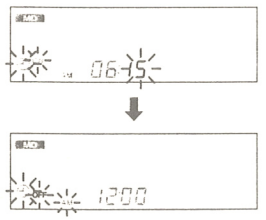

7 Set the timer-off time.

1 Press DATE to select AM or PM, then press REPEAT/ENT/MEMO.

2 Enter the hour with the numeric buttons, then press REPEAT/ENT/MEMO to store it.

3 Enter the minutes with the numeric buttons, then press REPEAT/ENT/MEMO to store the timer-off time.
The timer-off time is replaced by the previous display.

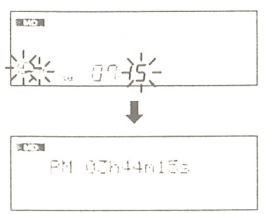

8 Press STANDBY.
The power turns off automatically, and ◴ goes on.
At the timer-on time, the power turns on and the selected source plays automatically. (The back-lighting stays off.)

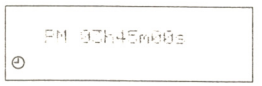

If you make a mistake
Press TIMER, then repeat the procedure again.

To confirm the timer and function settings
Press TIMER, then REPEAT/ENT/MEMO. The selected function and "Pb" go on. Press REPEAT/ENT/MEMO again for the timer-on time, and again for the timer-off time. When finished, press TIMER to return to the previous display.

To turn off the unit during timer-activated operation
Turn off the power by pressing POWER.

To turn off the timer
Press STANDBY to turn off the ◴ indicator.

To continue using the same settings on succeeding days
You need not set the timer and function again since the timer settings and function are stored until you reset them. If the ◴ indicator is not on, press STANDBY to turn it on.

Timer-Recording Radio Programmes

By setting the timer, your unit will automatically record a desired radio programme while you are away or asleep.

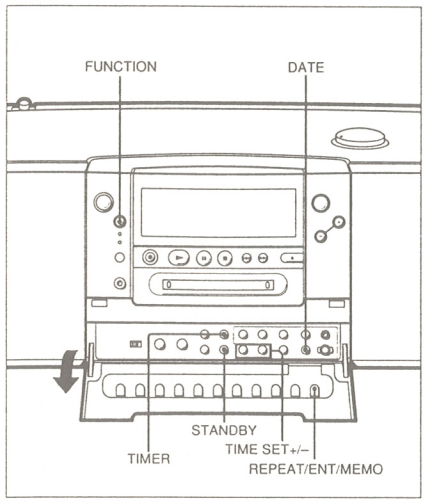

Before you start...
- Verify that the time setting is correct. (If not, set the correct time using the procedure *Setting the Clock* on page 10-E.)
- Verify that the ◴ indication is off. (If not, press STANDBY to turn it off.)

1 Tune in the desired station to be recorded.

2 Insert a recordable disc.
If the disc is record-protected, close the slot *(see page 21-E)*.

3 Press TIMER until "Pb" and ◴ (or "REC" and ◴) go on.
If "Pb" goes on, press the TIME SET (+ or -) button to change it to "REC".

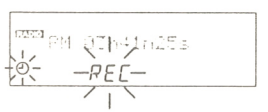

4 Press REPEAT/ENT/MEMO.

5 Press FUNCTION or TIME SET (+ or -) to turn on the RADIO indicator.

6 Press REPEAT/ENT/MEMO.
"ON" goes on.

7 Set the timer-on time.

1 Press DATE to select AM or PM, then press REPEAT/ENT/MEMO.

2 Enter the hour with the numeric buttons, then press REPEAT/ENT/MEMO to store it.

3 Enter the minutes with the numeric buttons, then press REPEAT/ENT/MEMO to store the timer-on time. "OFF" goes on next.

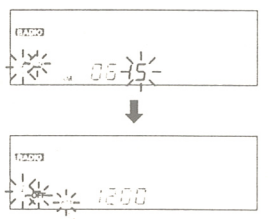

(Continued on next page.)

(Continued from previous page.)

8 Set the timer-off time.

1 Press DATE to select AM or PM, then press REPEAT/ENT/MEMO.

2 Enter the hour with the numeric buttons, then press REPEAT/ENT/MEMO to store it.

3 Enter the minutes with the numeric buttons, then press REPEAT/ENT/MEMO to store the timer-off time.
The timer-off time is replaced by the previous display.

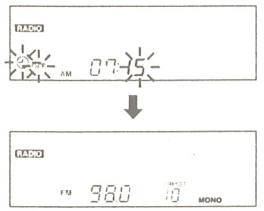

9 Press STANDBY.
The power turns off automatically, and ⏲ goes on. At the timer-on time, the power turns on and the selected radio station plays automatically. (The back-lighting stays off.)

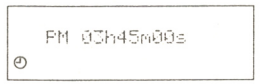

If you make a mistake
Press TIMER, then repeat the procedure again.

To confirm the timer and function settings
Press TIMER, then REPEAT/ENT/MEMO. The selected function and "REC" go on. Press REPEAT/ENT/MEMO again for the timer-on time, and again for the timer-off time. When finished, press TIMER to return to the previous display.

To turn off the unit during timer-activated operation
Turn off the power by pressing POWER.

To turn on the timer
Press STANDBY to turn off the ⏲ indicator.

To continue using the same settings on succeeding days
You need not set the timer and function again since the timer settings and function are stored until you reset them. If the ⏲ indicator is off, press STANDBY to turn it on.

Note on recording AM programmes
Before activating the timer for recording, adjust the AM loop aerial for optimum signal reception.

Connecting Optional Equipment

Connecting your unit to other components allows you to enjoy MD sound on high-quality output equipment or record MD sound on other equipment.

Hooking up a component with digital input capability

Use a POC-5 optical cable (not supplied) to connect the digital input jack of the other component to the OPTICAL DIGITAL OUT (MD) jack.

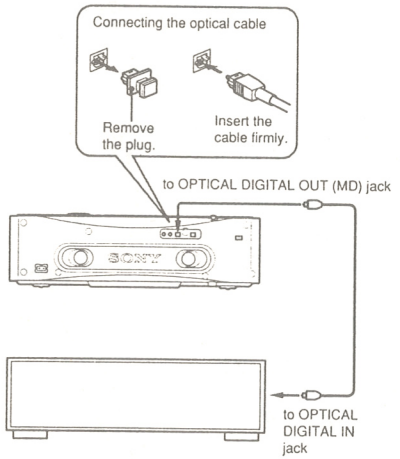

Notes

- You cannot use the digital output jack (OPTICAL DIGITAL OUT) to dub to another digital component with a sampling frequency different from that of the MD unit such as DAT (32 kHz, 48 kHz). In these cases, use the analog output jack (LINE OUT) as described next in the next section, *Hooking up a component with analog input capability*.
- Do not touch the terminals of the optical cable since contamination from the fingers may interfere with the signal output.

Hooking up a component with analog input capability

Use an RK-G136 (not supplied) to connect the analog input jack of the other component to the LINE OUT jack.

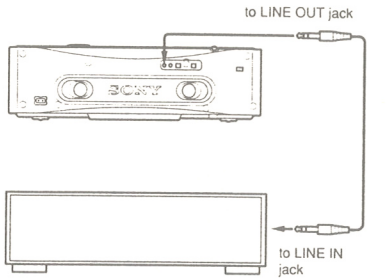

SECTION 2
DISASSEMBLY

2-1. FRONT CABINET ASSY REMOVAL

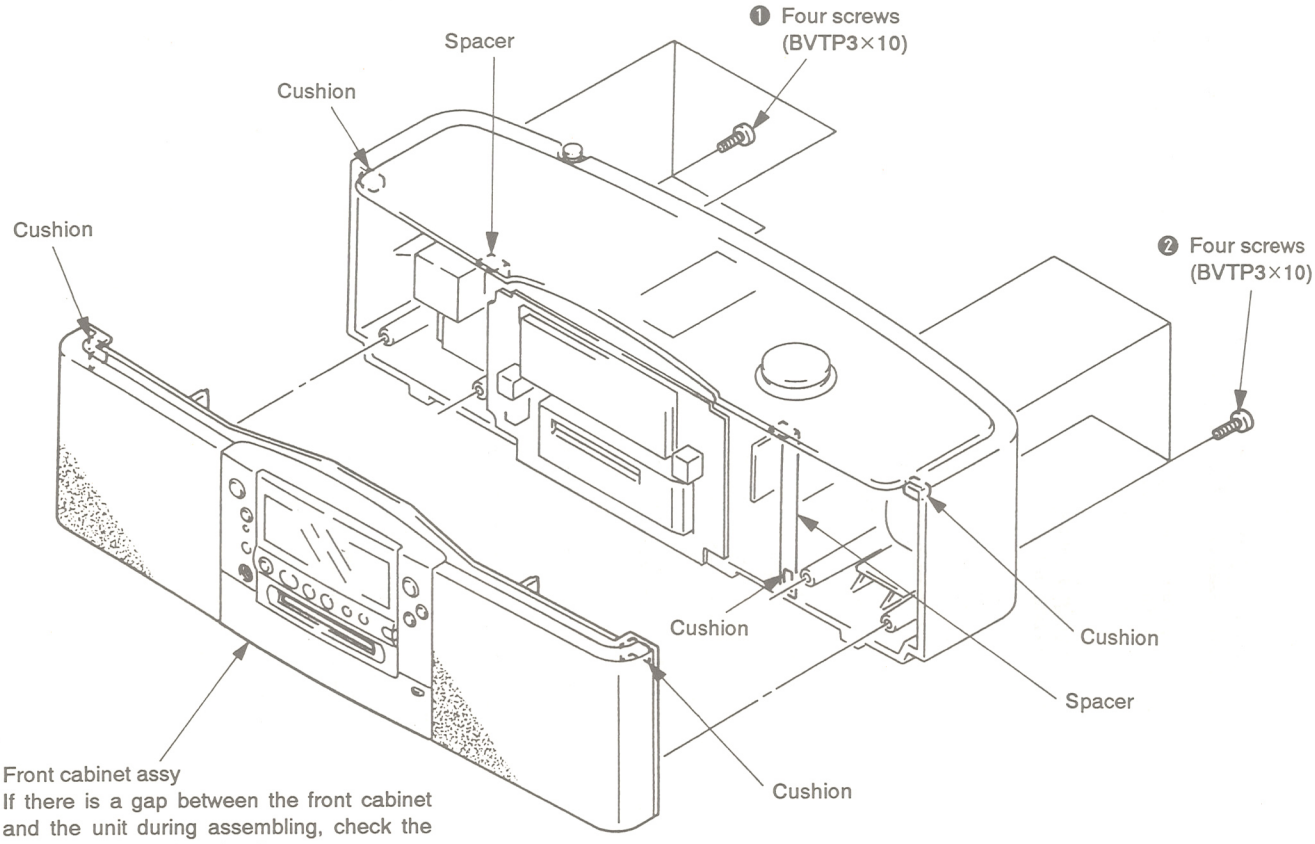

2-2. CONTROL BOARD REMOVAL

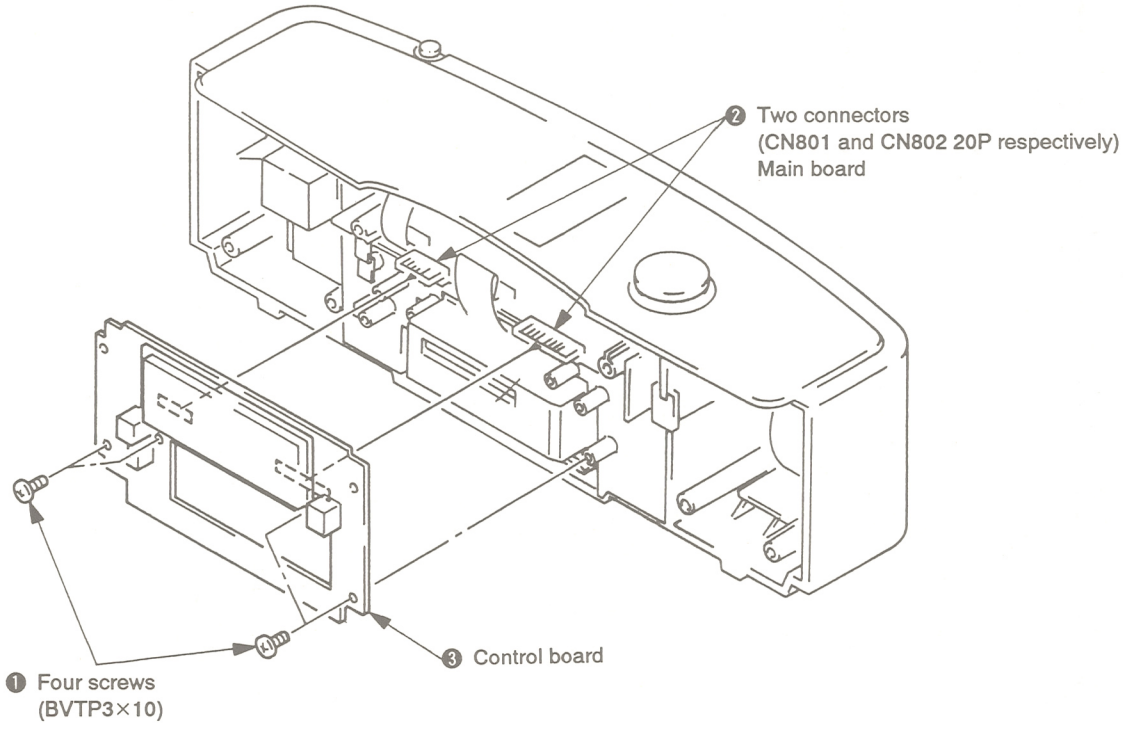

2-3. MD BLOCK ASSY REMOVAL

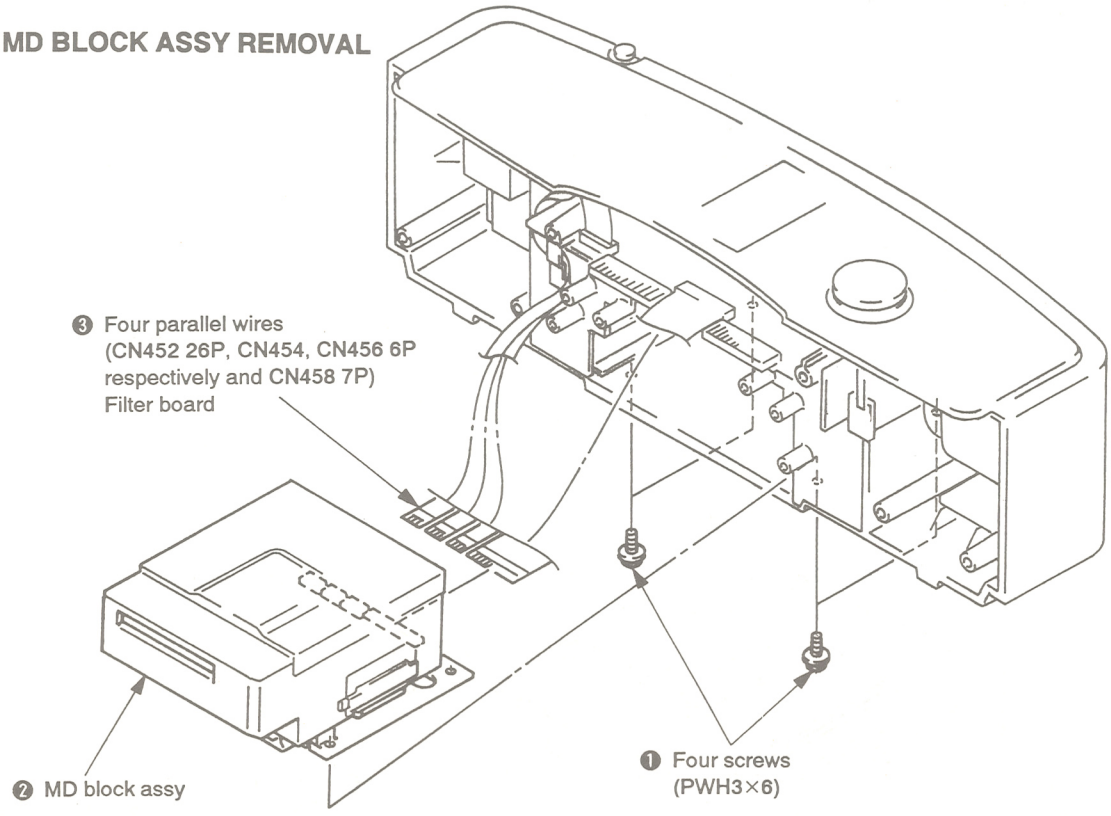

2-4. MAIN BOARD AND RADIO BOARD REMOVAL

※ When mounting the radio board, a protrusion of antenna terminal board should be in the center of the fuse holder on the radio board.

※ For easy removal, hook the knob using a dial string,etc. and pull.

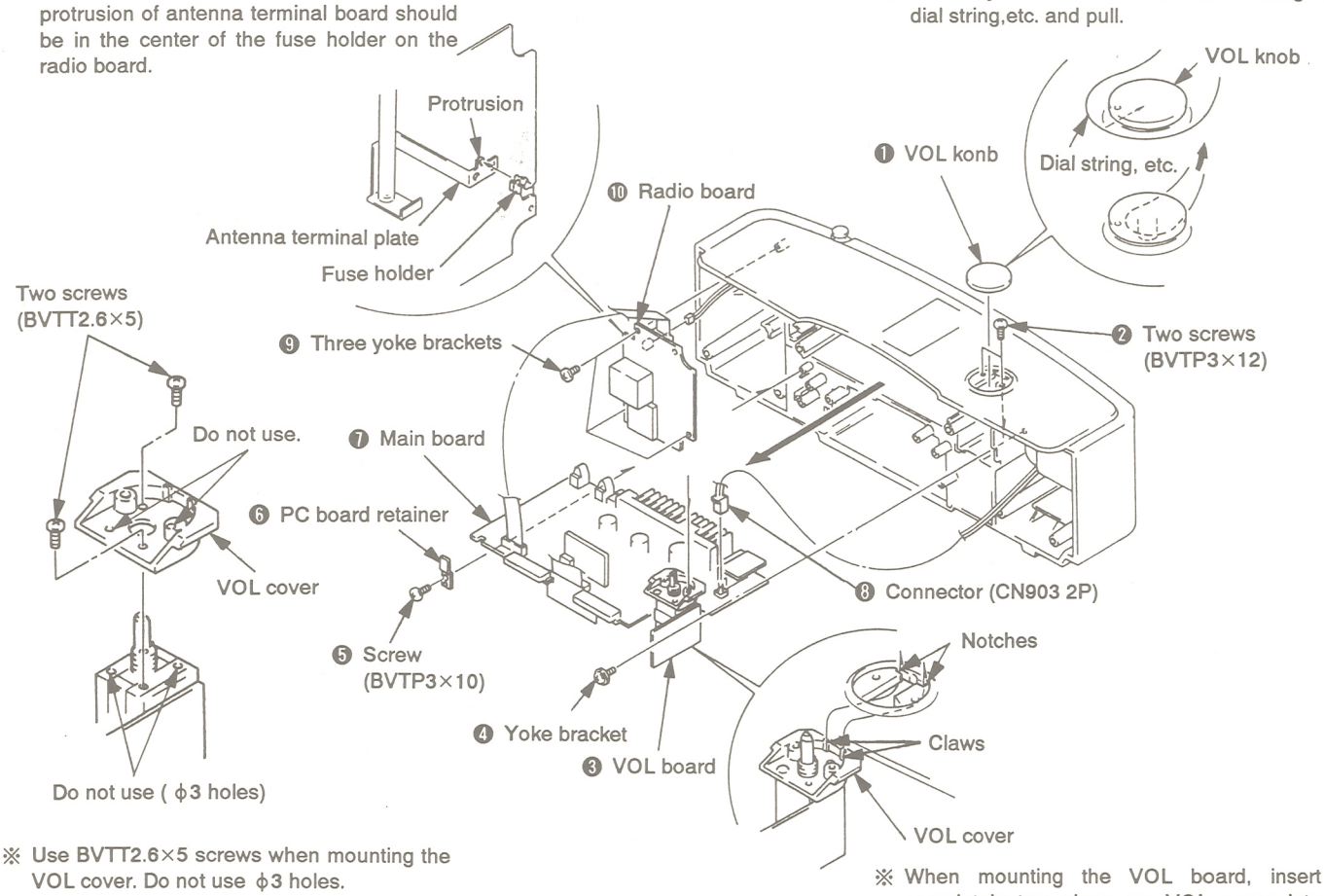

※ Use BVTT2.6×5 screws when mounting the VOL cover. Do not use ϕ3 holes.

※ When mounting the VOL board, insert completely two claws on VOL cover into notches in the rear cabinet.

2-5. MD SECTION (MF-ZSM1-106) AND I O BOARD REMOVAL

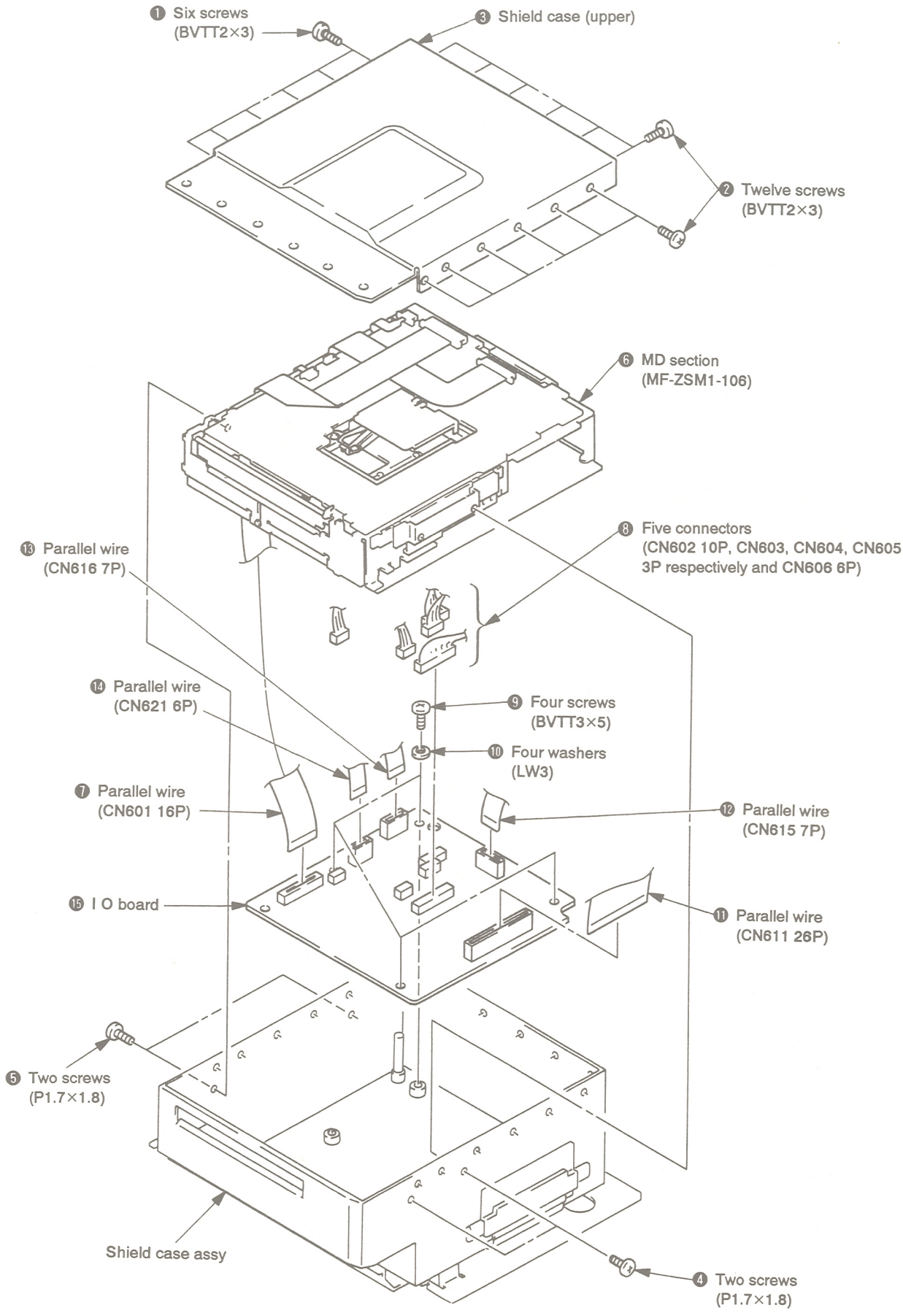

2-6. CONTROL BOARD (MD) REMOVAL

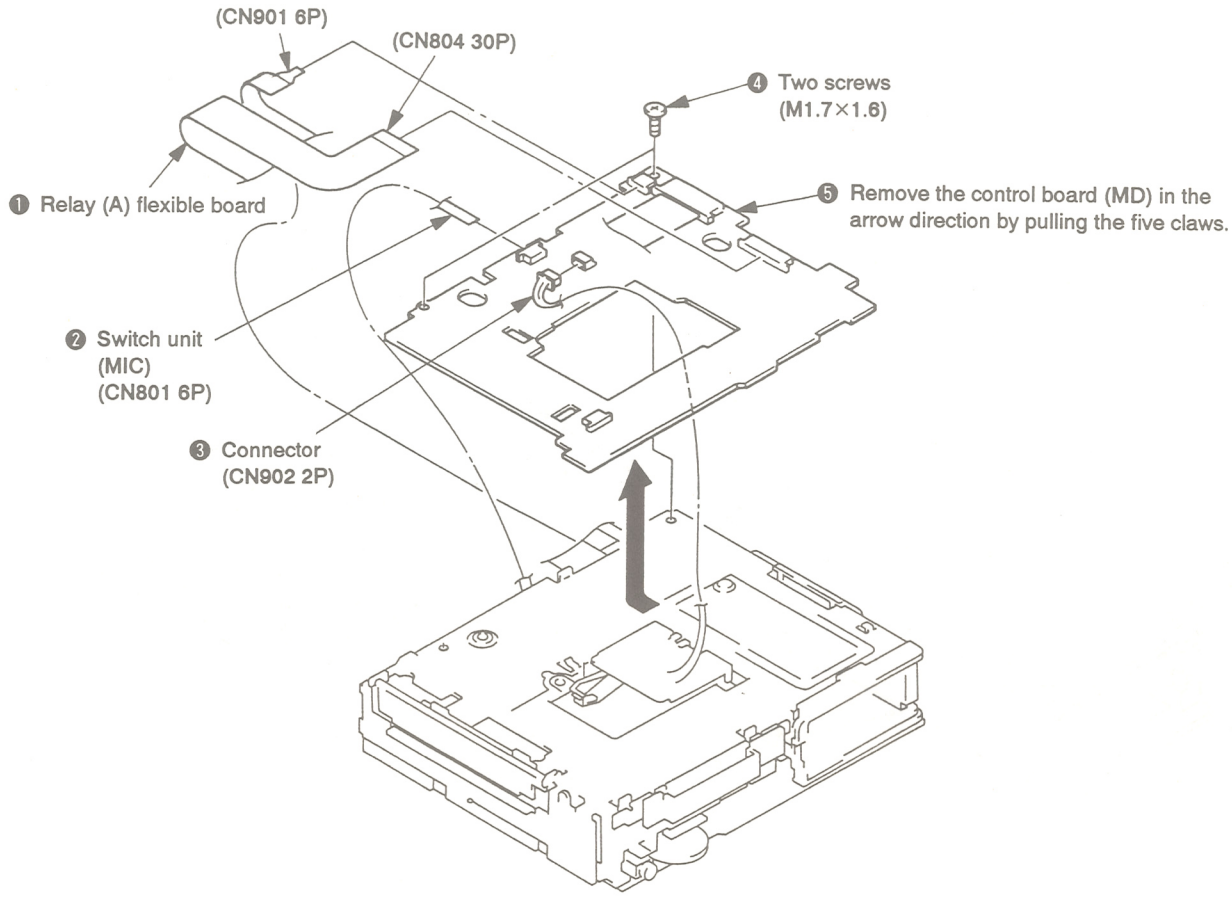

2-7. MAIN BOARD (MD) REMOVAL

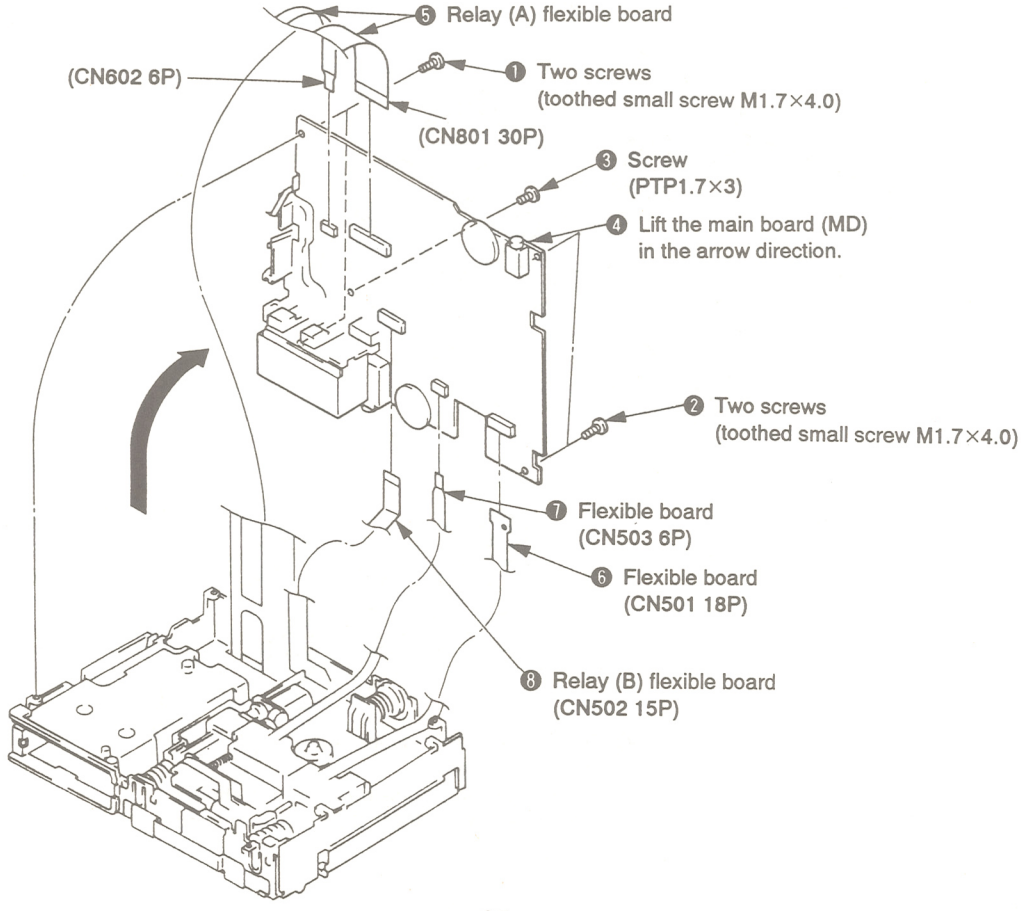

2-8. BATTERY CASE REMOVAL

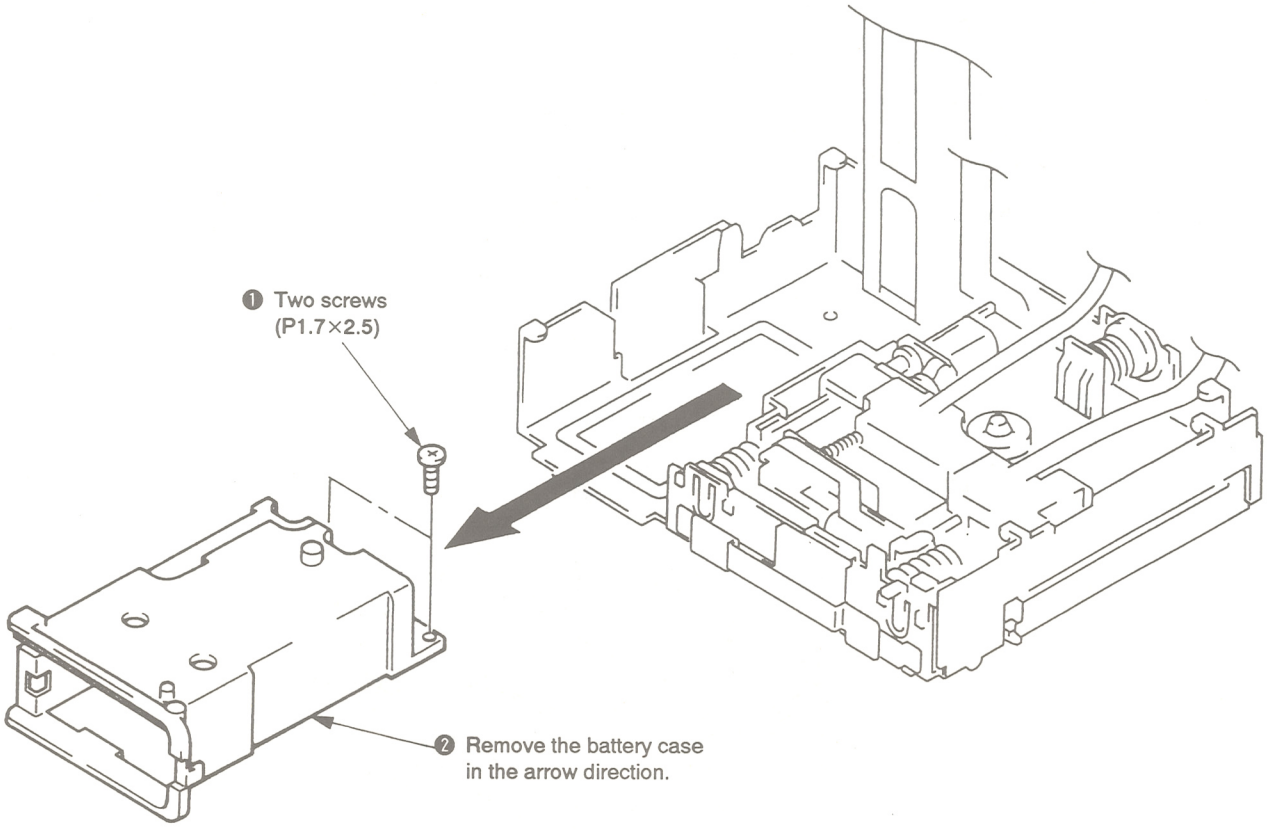

2-9. EJECT SHUTTER REMOVAL

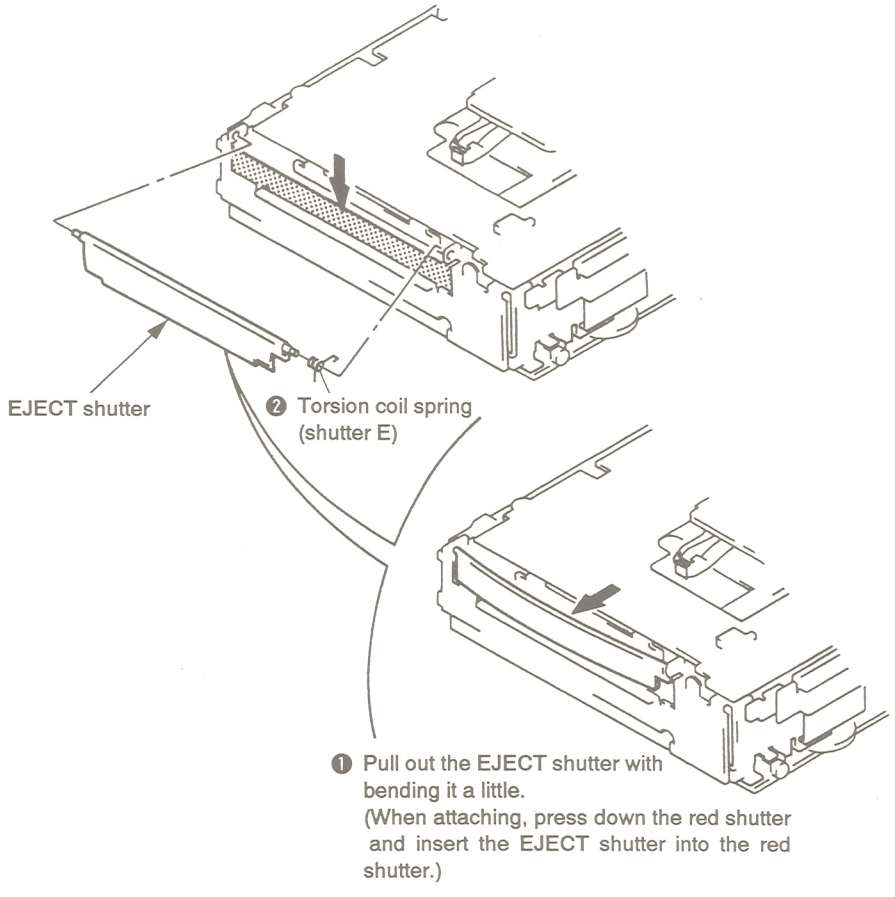

2-10. MECHANICAL DECK ASSY (MT-MZ1-106) REMOVAL

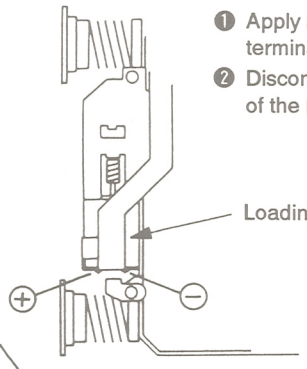

❶ Apply approx. 2V to the loading motor terminal to set it in loading condition.
❷ Disconnect the connector (control board) of the magnetic head.

※ When the loading condition can not occur due to the loading motor or mechanical failure:
(When performing the following procedures, be sure to set the loading condition to avoid mechanical burden.)
1. Detach the three dampers.
2. Move the mechanical deck in the arrow Ⓓ direction and unlock the ⓑ portion.
3. Move the mechanical deck in the arrow Ⓔ direction and unlock the Ⓒ portion.
4. Move the mechanical deck in the arrow Ⓕ direction and remove the mechanical deck.

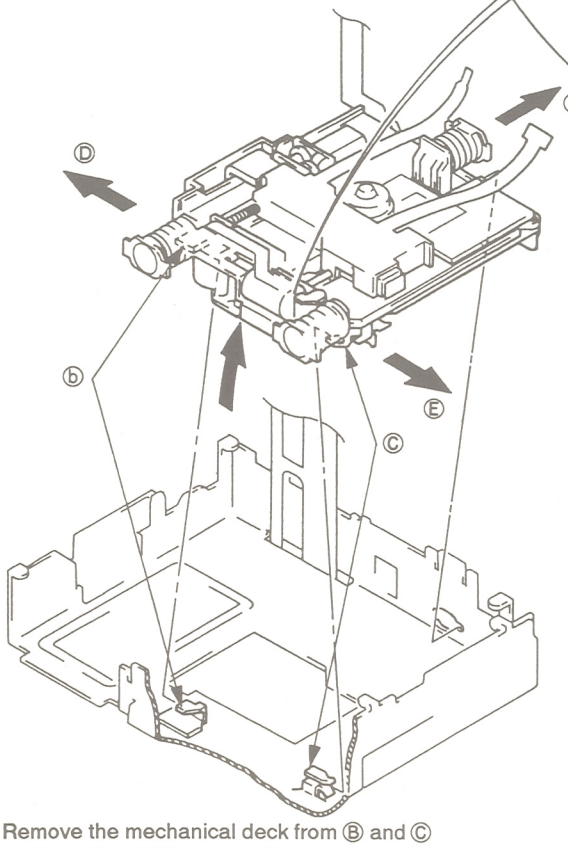

❹ Remove the mechanical deck from Ⓑ and Ⓒ portions first. (When installing, remove the damper at Ⓐ portion from the mechanical deck and mount the damper on the chassis, then mount the mechanical deck to Ⓐ portion first.)

Note: Do not touch the optical block when removing the mechanical deck.

Note: During mounting the mechanical deck, activate the loading motor to make loading condition. (The mechanical deck can not be mounted unless loading condition.)

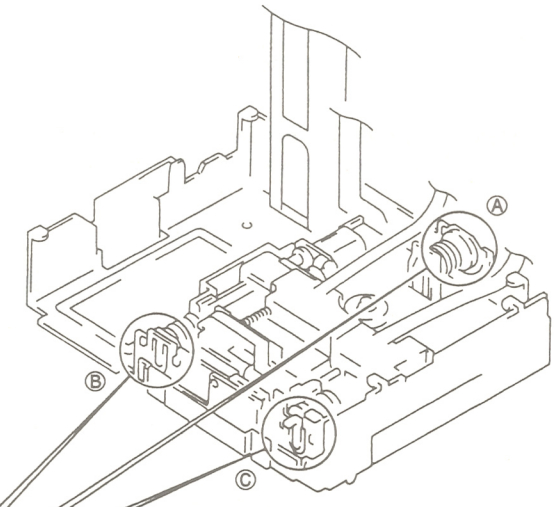

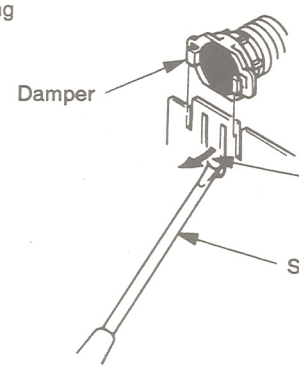

❸ Raise each ⓐ portion of the chassis Ⓐ, Ⓑ and Ⓒ using a screwdriver, etc.

Note: When mounting the mechanical deck, place the spring end of vibration proof holder side as shown in the figure below. (The balance condition of the mechanical deck makes the vertical held ejector in the best condition.)

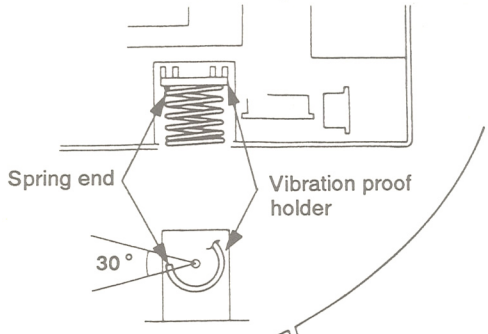

Note: When mounting, align the black mark on the magnetic head wire with the head cover slit, and smear the locking compound.

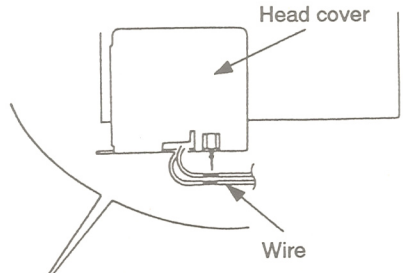

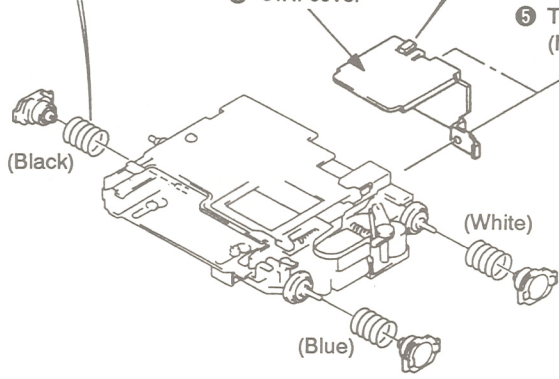

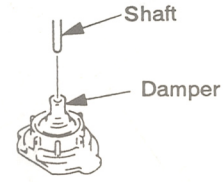

Note: When mounting the damper, make the rubber in a condition as shown in the figure, and insert the shaft.

2-11. OPTICAL PICK-UP BLOCK (KMS-130B) REMOVAL

❶ Turn the loading motor to set in eject condition.

Note: Fully take care of handling the magnetic head when removing and mounting.

❺ Four screws (M1.7×2.5)
(When tightening the screws, place the mechanical deck on a stand, etc. to avoid the magnetic head of destruction.)

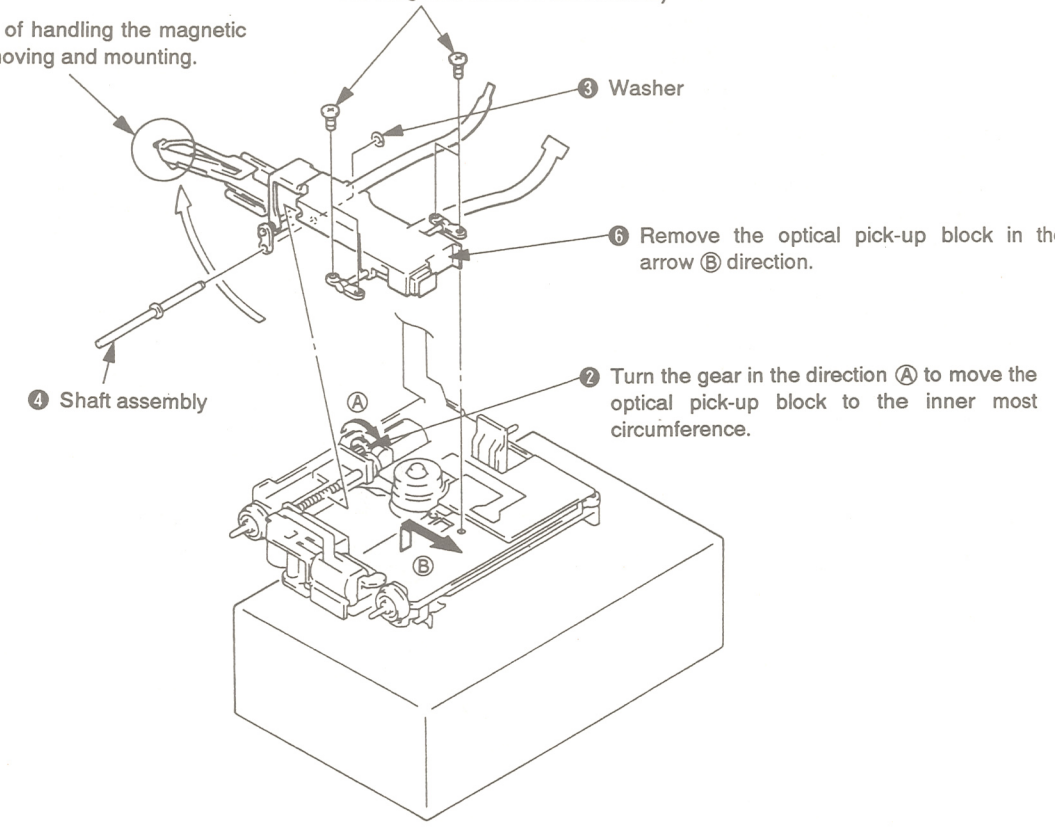

2-12-1. HOLDER ASSY AND MAIN SLIDER ASSY REMOVAL

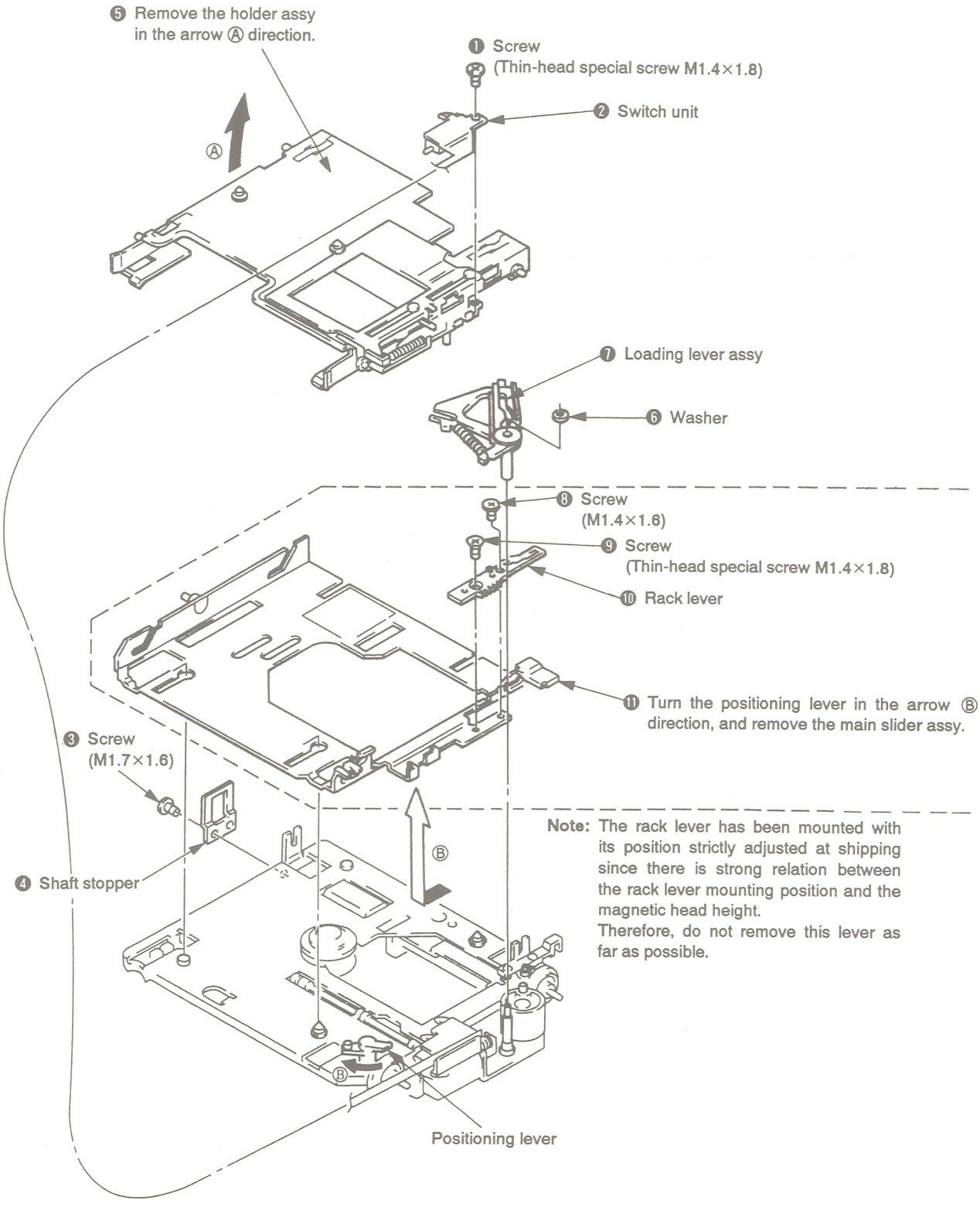

Note: The rack lever has been mounted with its position strictly adjusted at shipping since there is strong relation between the rack lever mounting position and the magnetic head height.
Therefore, do not remove this lever as far as possible.

2-12-2. HOLDER ASSY AND MAIN SLIDER ASSY INSTALLATION

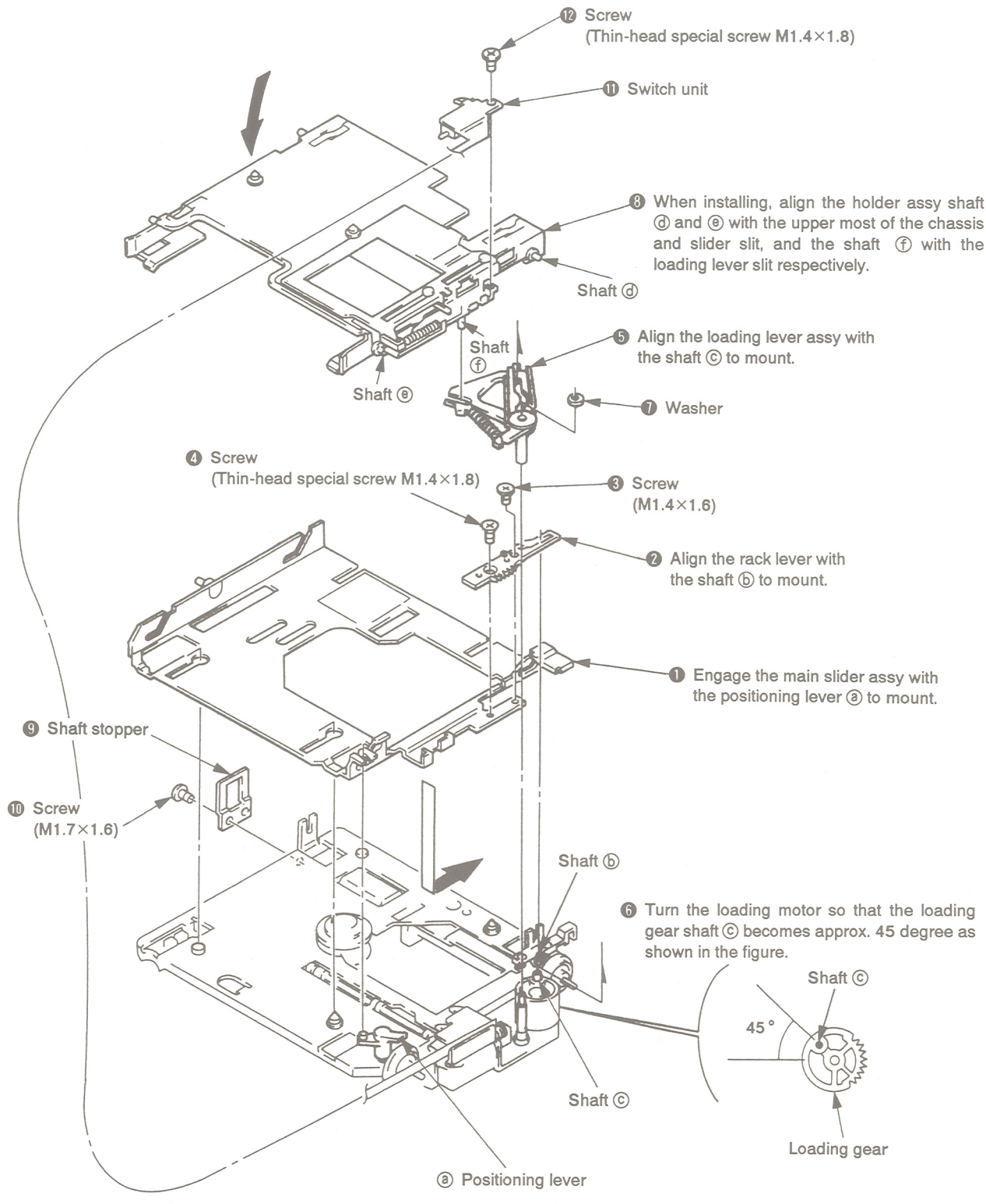

2-13. SLED MOTOR REMOVAL

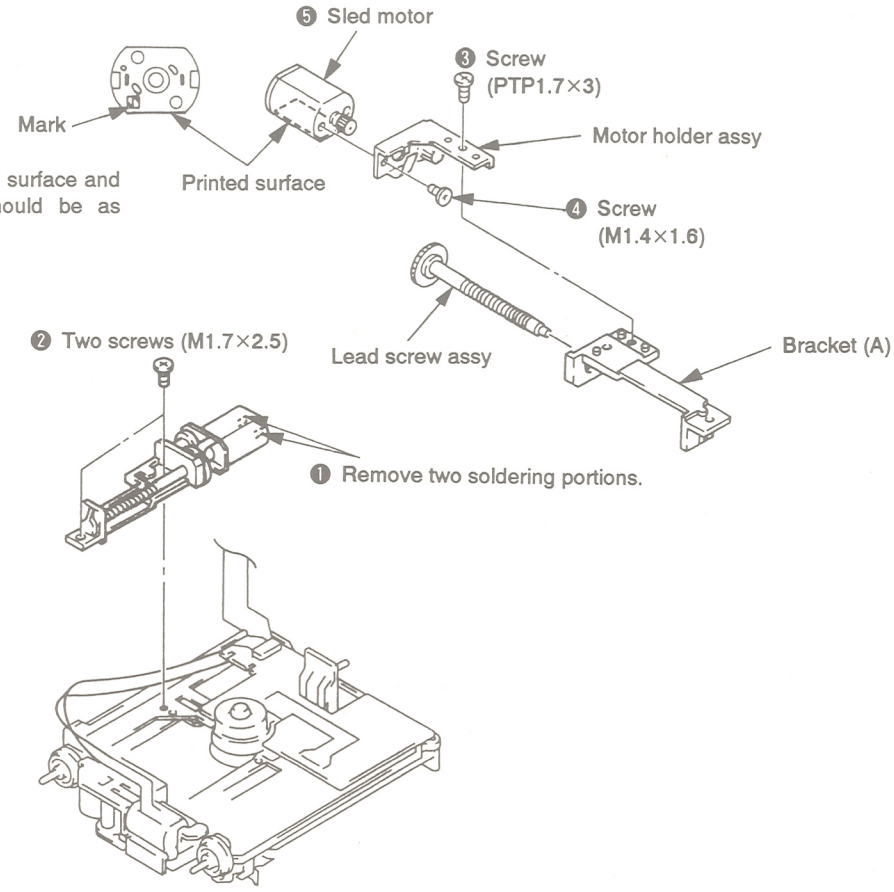

Note: When mounting, the printed surface and ⊕ mark of the motor should be as shown in the figure.

2-14. LOADING MOTOR REMOVAL

※ Remove the holder assy and loading lever assy with referring to section 2-12.

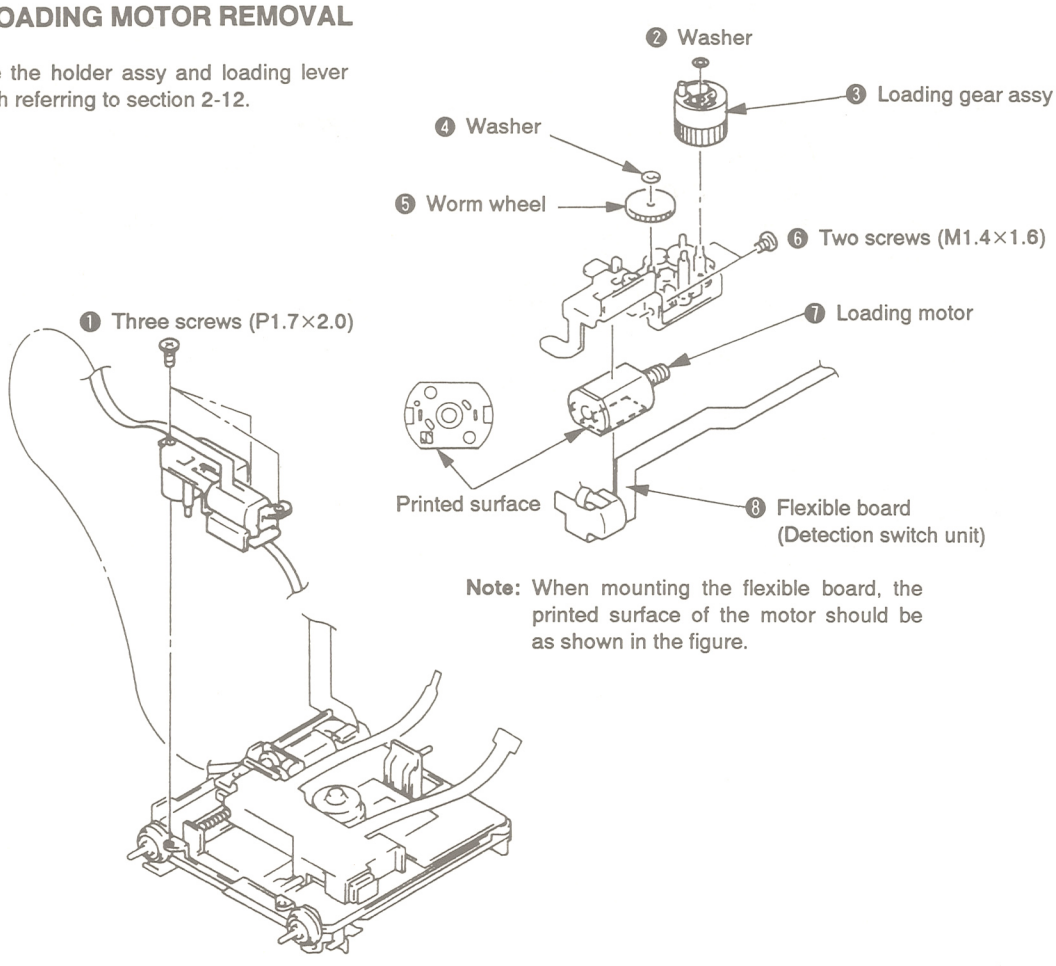

Note: When mounting the flexible board, the printed surface of the motor should be as shown in the figure.

2-15. SPINDLE MOTOR REMOVAL

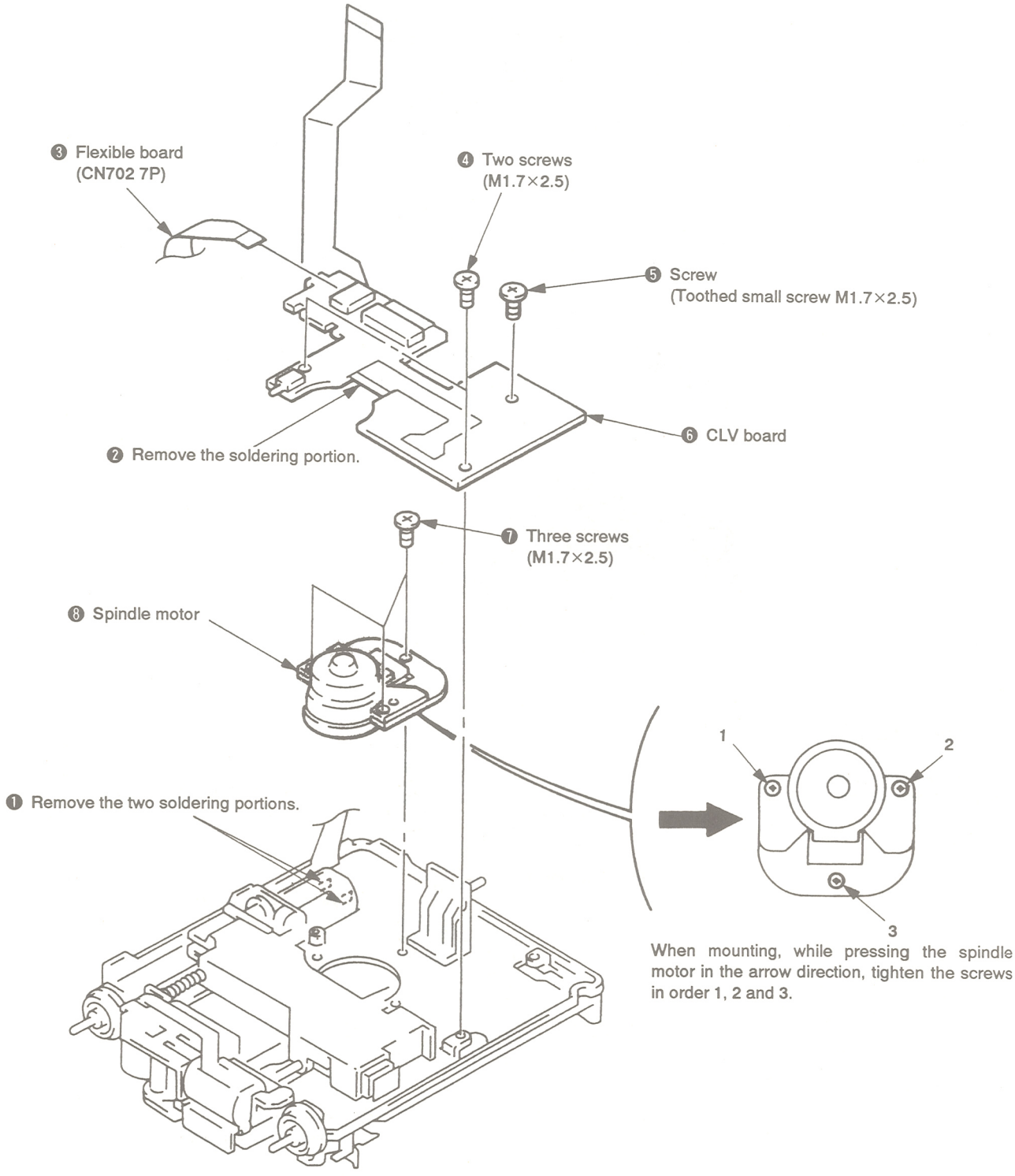

SECTION 3
IC PIN FUNCTIONS

IC601 EFM/ACIR ENCODER/DECODER (CXD2525R)

*** (3) of I/O is state output and (A) is analog output.**

Pin Name	Signal Name	I/O	Function
1	MDP	O (3)	Spindle motor servo control
2	MDS	O (3)	Spindle motor servo control
3	EFMI	I	Playback EFM input
4	ASY	O	Playback EFM full-swing output
5	LOCK	O	Spindle servo (CLV) lock state monitor. Locks at "H".
6	VCOO	O	EFM decoder analog PLL oscillation output (196Fs=8.6436 MHz)
7	VCOI	I	EFM decoder analog PLL oscillation input (196Fs=8.6436 MHz)
8	TEST1	I	Test pin. Normally GND.
9	PDO	O (3)	EFM decoder analog PLL phase comparison output
10	VSS	–	Digital GND
11	EFMO	O	EFM output during recording
12	ATER	O	ADIP CRC flag output. "H" when error.
13	CNIN	I	Track jump number count signal input
14	SENS	O (3)	Internal status output pin for the serial bus address
15	SYPL	I	SQSY, ADSY, DQSY, MQSY polarity switching input pin. Active high when "H". (to GND)
16	FILO	O (A)	Digital PLL master PLL filter output
17	FILI	I	Digital PLL master PLL filter input
18	PCO	O (3)	Digital PLL master PLL phase comparison output
19	AVSS	–	Analog GND
20	CLTV	I	Digital PLL master PLL VCO control voltage input
21	AVDD	–	Analog power supply
22	XRST	I	System reset input. Active low
23	REC	I	Decoder when "L" and encoder when "H"
24	TEST8	I	Test pin. Normally GND
25	SCLK	I	Serial bus clock input
26	XLAT	I	Serial bus latch input
27	SWDT	I	Serial bus writing data input
28	SRDT	O (3)	Serial bus reading data output
29	ADSY	O	ADIP sync output
30	SQSY	O	Sub code Q sync output
31	VDD	–	Digital power supply
32	DQSY	O	Sync (SCOR) output of sub code Q of the digital in U-bit CD format
33	TEST7	O	Open
34	DTI	I	Recording audio signal input
35	DTO	O (3)	Playback audio signal output. High impedance during recording
36	C2PO	O	PLayback: C2PO. Digital REC: D, In-VFLAG. Analog REC: 0
37	BCK	O	2.8224 MHz output (MCLK system)
38	XBCK	O	BCK reverse output (MCLK system)
39	LRCK	O	44.1 kHz (=Fs) (MCLK system)
40	WDCK	O	88.2 kHz (MCLK system)

Pin Name	Signal Name	I/O	Function	
41	FS4	O	176.4 kHz	(MCLK system)
42	GTOP	O	Opens the sync protection window when "H"	(INPUT EFM SYNC monitor output) (not used)
43	XUGFS	O	Unguarded frame sync at "L"	(INPUT EFM SYNC monitor output) (not used)
44	XPLCK	O	EFM decoder PLL clock output	(98Fs=4.3218MHz)
45	GFS	O	Frame sync OK at "H"	(INPUT EFM SYNC monitor output)
46	EPDO	O (3)	EFM encoder external PLL phase comparison output.	Freq.: low → "H"
47	RFCK	O	7.35 kHz output	(MCLK system)
48	EVCI	I	EFM encoder external PLL oscillation input	(196 Fs=8.6436 MHz)
49	EVCO	O	EFM encoder external PLL oscillation output	(196 Fs=8.6436 MHz)
50	VSS	–	Digital GND	
51	MCLK	O	22.579 MHz output. Duty will not be protected.	
52	XTAI	I	Crystal oscillation input	(512 Fs=22.5792 MHz)
53	XTAO	O	Crystal oscillation output	(512 Fs=22.5792 MHz)
54	TEST9	I	Fixed at "L"	
55	MVCI	I	Digital-in PLL oscillation input	(512 Fs=22.5792 MHz)
56	MVCO	O	Digital-in PLL oscillation output	(512 Fs=22.5792 MHz)
57	TEST2	O	Fixed at "Open"	
58	DIPD	O (3)	Digital PLL phase comparison output.	Freq.: low → "L"
59	RAOF	O	RAM overflow output	(Monitor output of decoder)
60	MT3	O	Playback corrected state monitor output	
61	MT2	O	Playback corrected state monitor output	
62	MT1	O	Playback corrected state monitor output	
63	MT0	O	Playback corrected state monitor output	
64	WFCK	O	7.35 kHz output (EFM decoder PLL system during playback, EFM encoder PLL system during recording)	
65	DIN	I	Digital audio input pin	
66	MD2	I	Digital audio out ON/OFF pin. ON when "H"	
67	DOUT	O	Digital audio output pin	
68	DIDT	O	Audio data output pin of the digital audio input pin	
69	DODT	I	16-bit data input pin for the digital audio output	
70	DOVF	I	Validity flag input pin for the digital audio	
71	VDD	–	Digital power supply	
72	TEST3	I	Fixed at "L"	
73	TEST4	O	Fixed at "Open"	
74	TEST5	I	Fixed at "L"	
75	TEST6	I	Fixed at "L"	
76	FMCK	I	ADIP reading clock input (6.3 kHz)	(TTL Schmidt input)
77	FMDT	I	ADIP data input	(TTL Schmidt input)
78	ADFG	I	ADIP carrier signal input (20.05 kHz)	(TTL Schmidt input)
79	FSW	O (3)	Spindle motor output filter switching output. "Z" when CLV-P. Others: "L"	
80	NON	O	Spindle motor ON/OFF control output. ON when "H"	

Note:
- XUGFS is a frame sync obtained from the EFM signal and is a negative pulse. Signal before sync protection.
- PLL is made for XPLCK so that changes in the reversion and falling edge of the EFM PLL clock and the EFM signal match.
- The GFS signal becomes "H" when the frame sync and interpolation protection timing match.
- C2PO is a signal which shows the error state of the data.
- RAOF is a signal generated when the 32K RAM exceeds the ± 4F jitter margin.

IC602 Shockproof Memory Controller (CXD2526Q)

Pin Name	Signal Name	I/O	Function
1	A14	O	When RMSL is H: SRAM address bus A14. When RMSL is L: WFFUL (Note) (not used)
2	A15	O	When RMSL is H: SRAM address bus A15. When RMSL is L: RFEMP (Note) (not used)
3	A16	O	When RMSL is H: SRAM address bus A16. When RMSL is L: WFOVF (Note) (not used)
4	A17	O	When RMSL is H: SRAM address bus A17. When RMSL is L: WDTM (Note) (not used)
5	A18	O	When RMSL is H: SRAM address bus A18. When RMSL is L: ZERO (Note) (not used)
6	A19	O	When RMSL is H: SRAM address bus A19. When RMSL is L: MDTSC (Note) (not used)
7	A20	O	When RMSL is H: SRAM address bus A20. When RMSL is L: CMPSY (Note) (not used)
8	LRCK	I	LRCK input from the EFM encoder/decoder
9	BCK	I	BCK input from the EFM encoder/decoder
10	C2PO	I	C2PO input from the EFM decoder
11	DATA	I/O	Input/output data from the decoder during playback and that to the encoder during recording
12	VSS	–	GND
13	TEST	I	Test pin. Normally fixed at "L"
14	XRST	I	Reset input. Resets when "L"
15	MIN	I	External input monitor signal input pin. Inputs the signal to be monitored
16	SRDT	(HiZ) O	Microprocessor serial data output pin "Hi-z" when the CXD2526 read register is not selected
17	SWDT	I	Microprocessor serial data input pin
18	XSLT	I	Microprocessor serial data latch signal input pin
19	SCK	I	Microprocessor serial data shift lock input pin
20	SCTX	I	Data output enable signal input pin in the recording mode
21	RCPB	I	"L": Playback mode, "H": Recording mode
22	WRMN	I	"H": Write mode, "L": Monitor mode
23	SBMN	I	"H": Records the input signal according to the SDCT. "L": Records according to the DCT
24	XINT	O	Interrupting request output pin. "L" when the interrupting status is generated
25	MDSY	O	Input data MD sync detection signal
26	MEMFUL	O	"H" when the main data area is full with data
27	MEMEMP	O	"H" when the main data area is empty
28	UNDER	O	"H" when RMS<THUND
29	OVER	O	"H" when RMS ≧ THOVR
30	ERWR	O	"H" when the data which C2PO is effective is written in the RAM
31	BTOV4	O	"H" when BCT ≧ 400 (Hex)
32	TXST	O	"H" when data is transmitted
33	VDD	–	System power supply
34	BUSY	I/O	"H" when RAM is accessed
35	ZZ2	I	Test signal. Fixed at "H"
36	ZZ1	I	Test signal. Fixed at "H"
37	ZZ0	I	Test signal. Fixed at "H"
38	XALT	O	Data ready or latch signal to CXD2527R
39	ADT1	I	Pin for data input from CXD2527R
40	ADTO	O	Pin for data output to CXD2527R
41	ACK	O	Pin for data input/output clock output to CXD2527R
42	AC2	O	Pin for output data C2PO output to CXD2527R
43	XRQ	I	Pin for data request signal input from CXD2527R

Pin Name	Signal Name	I/O	Function
44	SDCK	I	External sub data I/F shift clock input (to GND)
45	SBDT	I/O	External sub data I/F data output pin in the playback mode and the data input pin in the recording mode
46	XWT	O	External sub data I/F wait signal. Must not transmit the clock for reading the new data at "L" (not used)
47	SRDY	O	External sub data I/F access permission signal. Ignores the clock for sub data R/W if it is transmitted at "H" (not used)
48	MCK	O	128 fs output pin (not used)
49	F256	O	256 fs output pin (not used)
50	XTLO	O	System clock output pin (22.5792 MHz) (not used)
51	XTLI	I	System clock input pin (22.5792 Mhz)
52	VSS	–	GND
53	TEST	I	Fixed at "L"
54	RMSL	I	External RAM select pin. "H": SRAM. "L": DRAM
55	ERR	I/O	C2PO input/output pin when EXTC2R is "H"
56	D7	O	SRAM data line D7 when RMSL is "H". Test signal when "L". (not used)
57	D4	I/O	RAM data bus D4 when RMSL is "H". Test signal when "L".
58	D0	I/O	RAM data bus D0
59	D1	I/O	RAM data bus D1
60	D3	I/O	RAM data bus D3
61	D2	I/O	RAM data bus D2
62	XCAS	I/O	DRAM $\overline{CAS}$ output when RMSL is "L". Data bus D6 when "L"
63	XOE	O	RAM output enable
64	A10	O	RAM address bus A10 (not used)
65	XWE	O	RAM write enable
66	XRAS	I/O	DRAM $\overline{RAS}$ output when RMSL is "L". Data bus D5 when "H"
67	A11	O	RAM address bus A11 (not used)
68	A9	O	RAM address bus A9
69	A0	O	RAM address bus A0
70	A1	O	RAM address bus A1
71	A2	O	RAM address bus A2
72	A3	O	RAM address bus A3
73	VDD	O	System power
74	A8	O	RAM address bus A8
75	A7	O	RAM address bus A7
76	A6	O	RAM address bus A6
77	A5	O	RAM address bus A5
78	A4	O	RAM address bus A4
79	A12	O	RAM address bus A12 when RMSL is "H". CS output when "L" (not used)
80	A13	O	RAM address bus A13 when RMSL is "H". SYOK output when "L" (not used)

Note: WFFUL: Becomes "H" when the writing FIFO becomes full.
RFEMP: Becomes "H" when the reading FIFO becomes empty.
WFOVF: Becomes "H" when the writing FIFO becomes overflow.
WDTM: Outputs the window timing inside the D1 clock.
ZERO: Outputs "H" when BCT is 0.
MDTSC: Becomes "H" when the input data header selector is 00 to IF and "L" at other times.
CMPSY: Interpolation sync timing.

SECTION 4
DIAGRAMS

4-1. CIRCUIT BOARDS LOCATION

— MAIN UNIT —

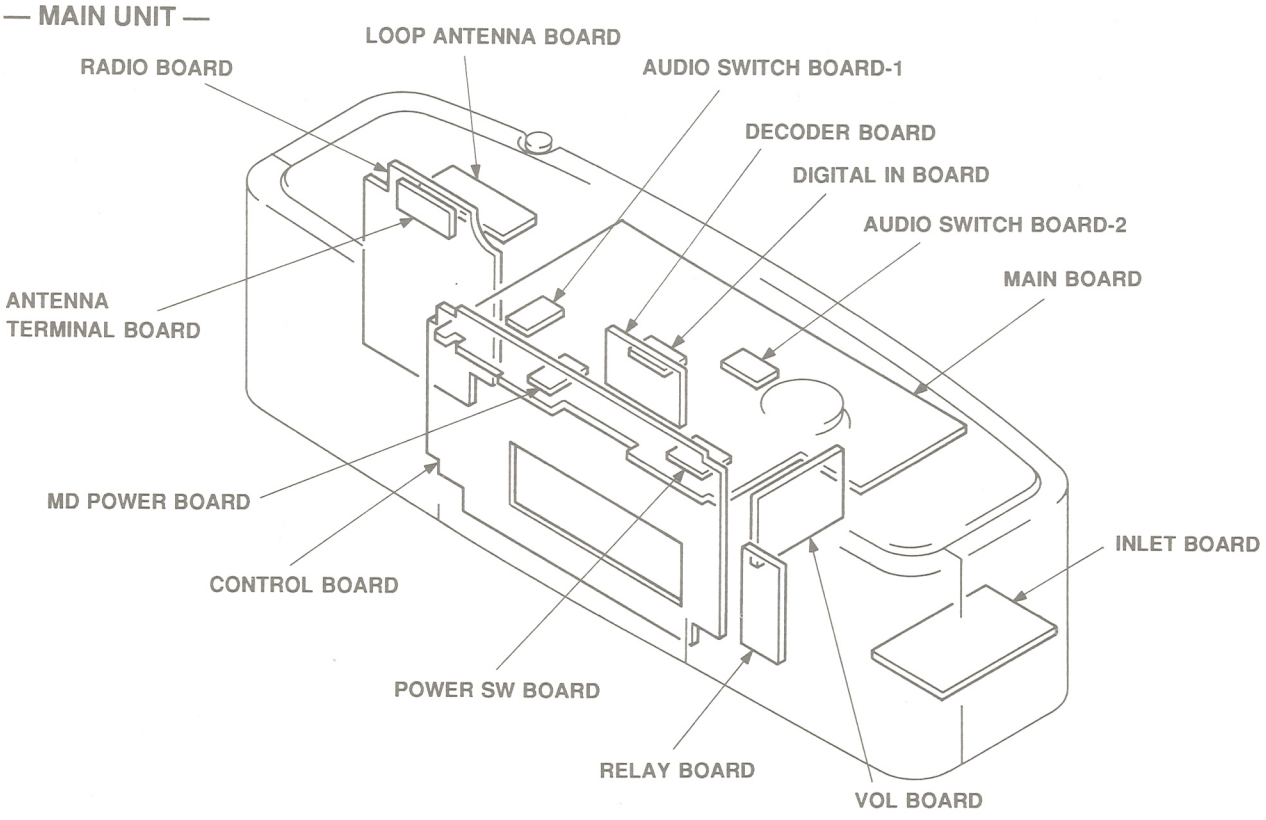

— MD BLOCK —

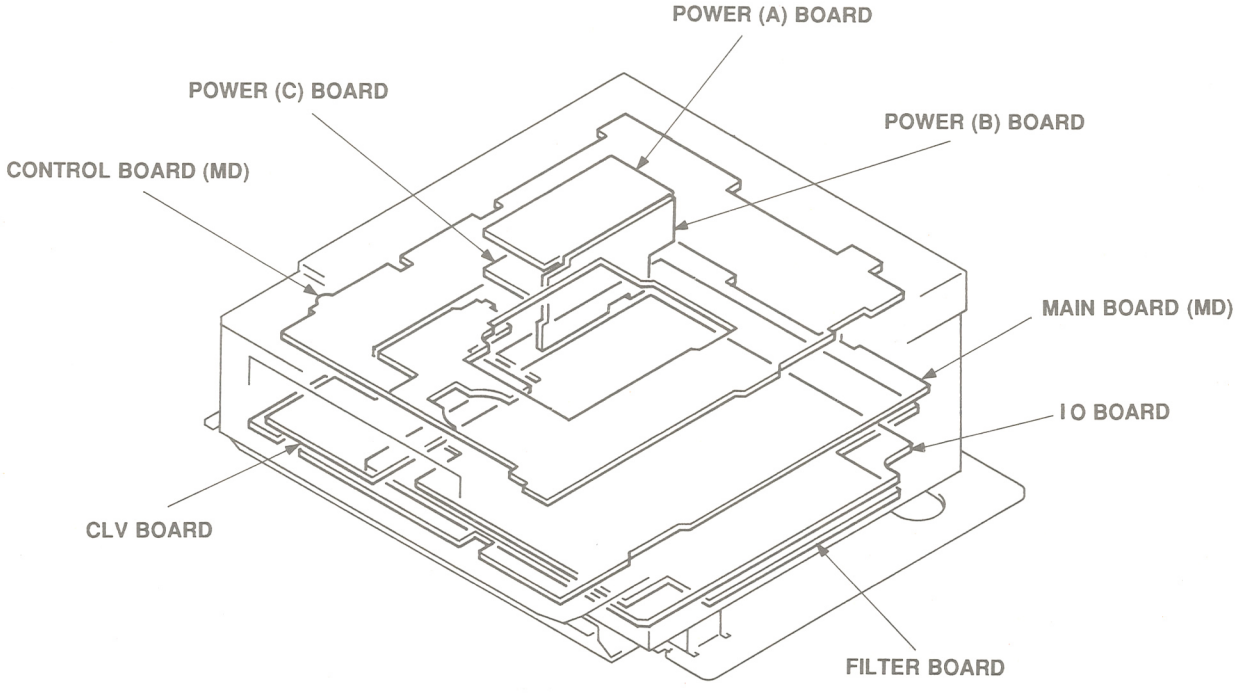

4-2. BLOCK DIAGRAM (1)

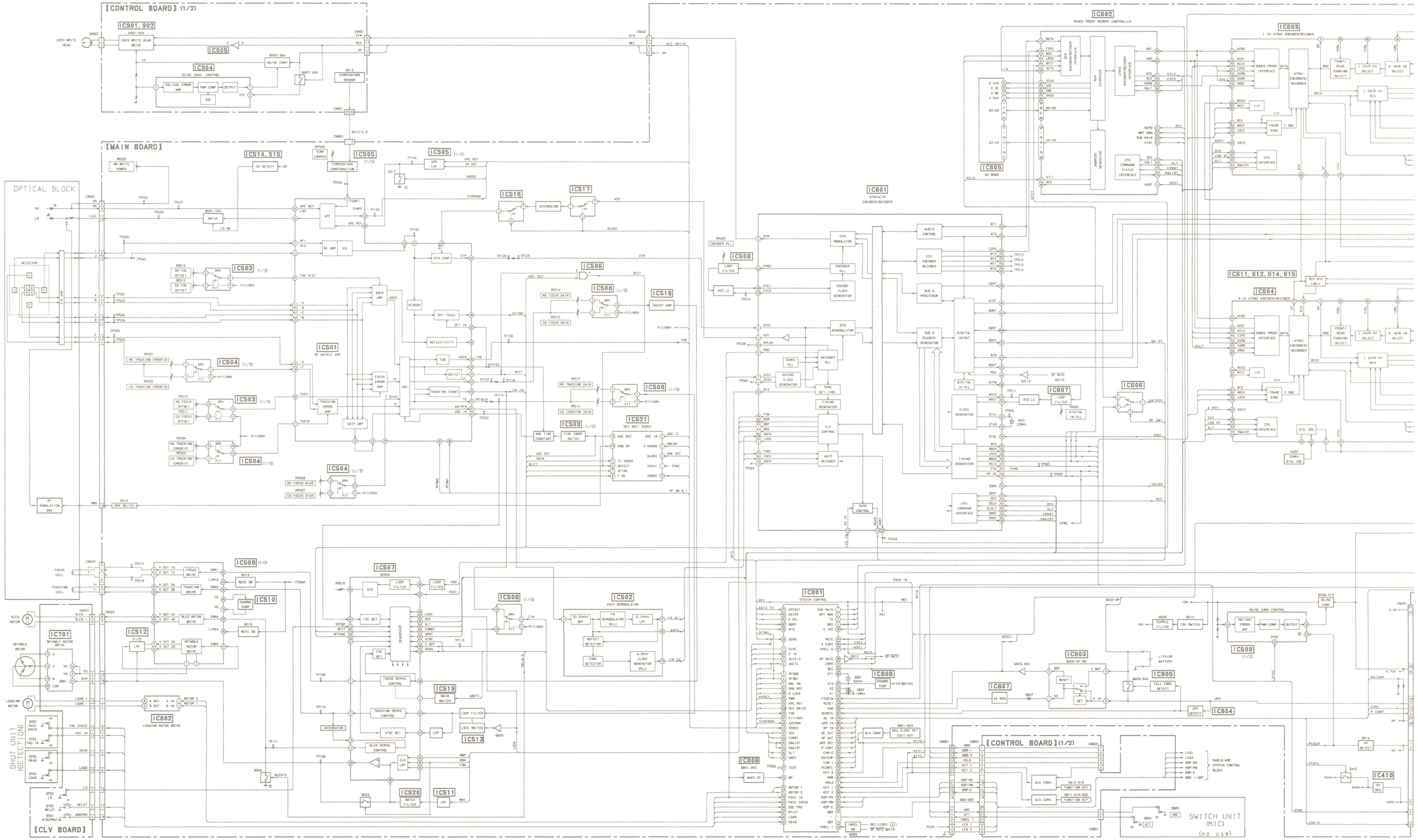

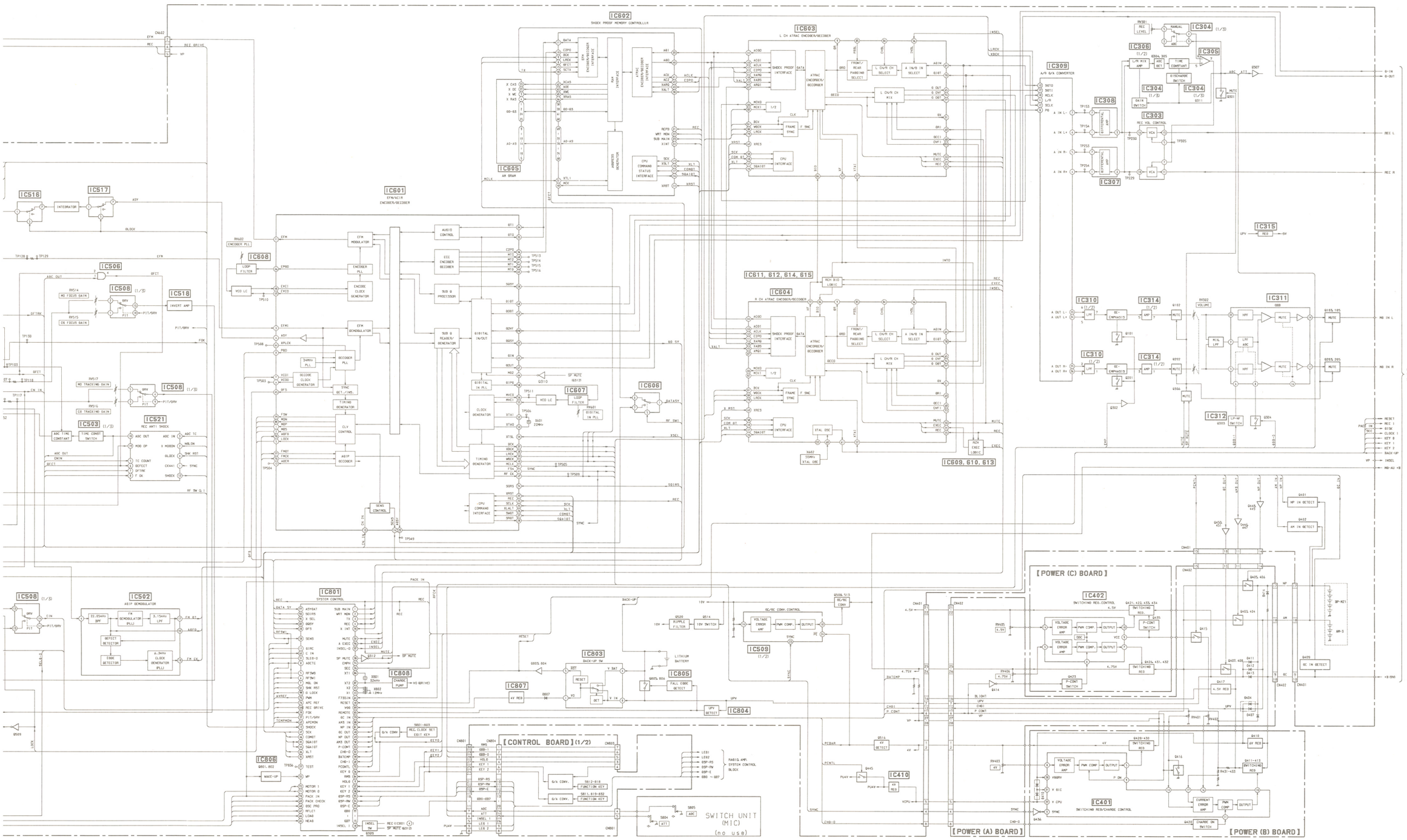
IC602
SHOCK PROOF MEMORY CONTROLLER
IC603
L CH ATRAC ENCODER/DECODER
IC604
R CH ATRAC ENCODER/DECODER
IC605
AM DRAM
IC601
EFM/ACIR ENCODER/DECODER
IC606
IC607
IC608
IC609, 610, 613
IC611, 612, 614, 615
IC309
A/D 6/A CONVERTER
IC304
IC305
IC306
IC307
IC308
IC303
IC310
IC311
IC312
IC314
IC315
IC516
IC517
IC518
IC506
IC508
IC521
IC503
IC502
IC801
SYSTEM CONTROL
IC806
IC807
IC808
IC803
IC805
IC804
IC509
IC410
IC402
IC401
[POWER (C) BOARD]
[POWER (A) BOARD]
[POWER (B) BOARD]
[CONTROL BOARD] (1/2)
SWITCH UNIT (MIC) (no use)

4-3. BLOCK DIAGRAM (2)

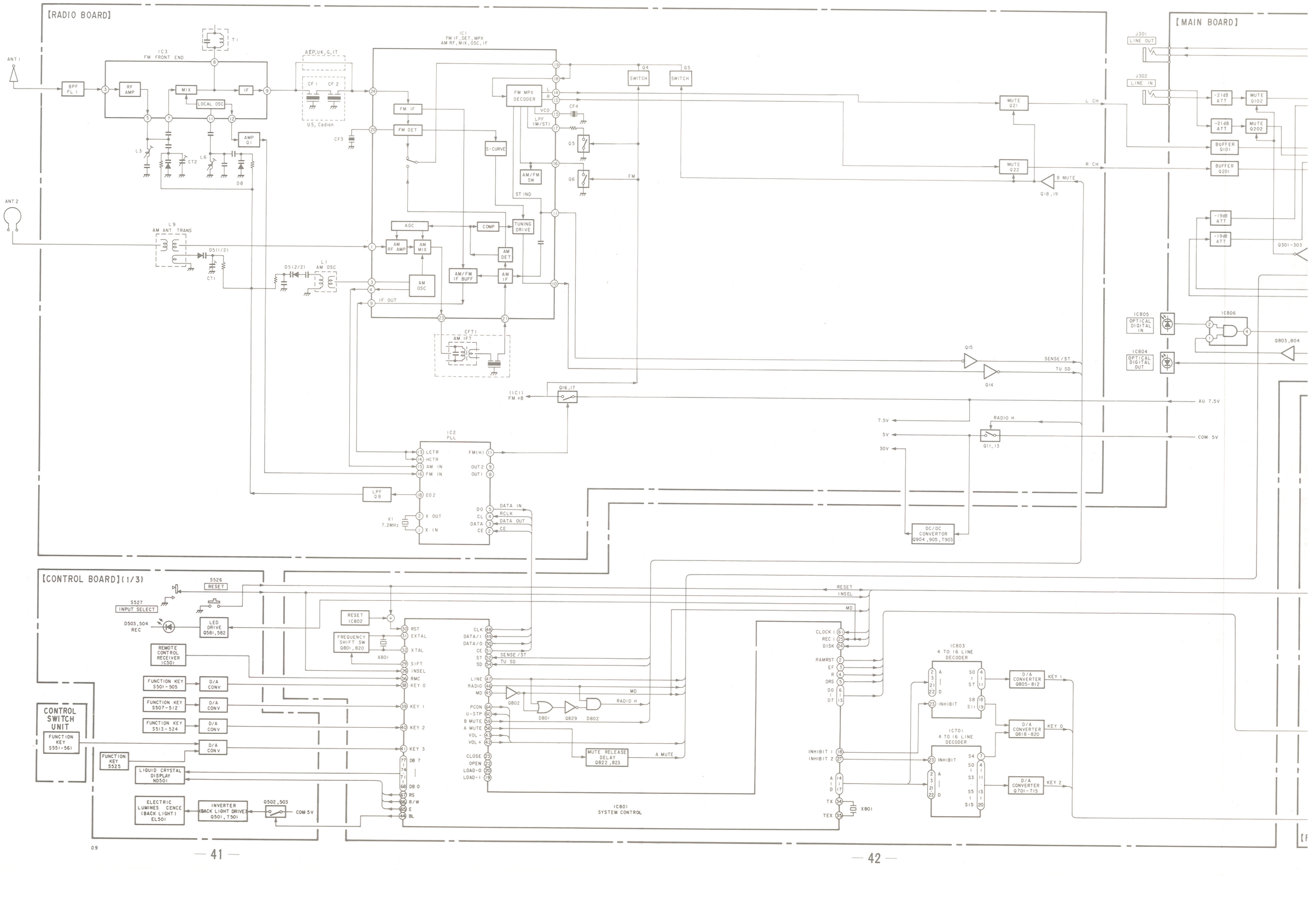

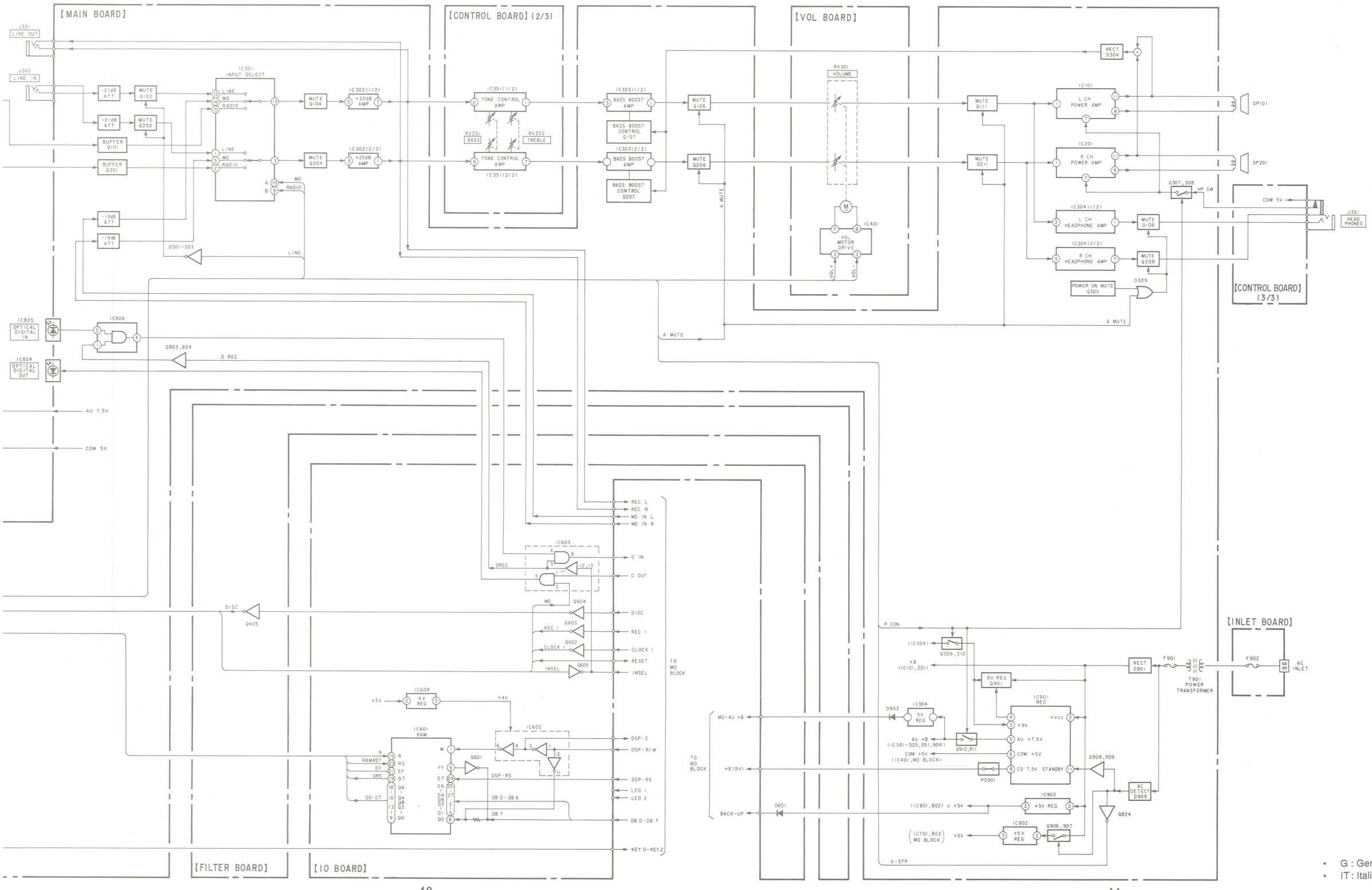

- G : German model
- IT : Italian model

4-4. PRINTED WIRING BOARDS

- MAIN SECTION 1 (MAIN, DECODER, VOL and INLET board)
- See page 37 for Circuit Boards Location and see page 91 for Semiconductor Lead Layouts.

• Semiconductor Location

Ref. No.	Location	Ref. No.	Location
D304	D-11	Q303	B-12
D309	E-12	Q305	E-12
D701	F-18	Q306	B-8
D801	E-7	Q307	F-11
D802	E-7	Q308	F-11
D902	G-2	Q309	G-5
D903	D-9	Q310	G-5
D905	D-5	Q701	G-17
D906	D-5	Q702	G-17
D909	C-5	Q703	G-17
D910	G-4	Q704	G-17
D911	A-5	Q705	G-17
D912	B-5	Q706	G-16
D913	B-5	Q707	G-16
D914	C-5	Q708	E-16
		Q709	E-16
IC101	B-10	Q710	E-17
IC201	B-9	Q711	E-17
IC301	D-14	Q712	E-17
IC302	C-14	Q713	E-17
IC303	C-12	Q714	E-17
IC304	E-13	Q715	E-17
IC401	D-16	Q801	D-8
IC701	F-17	Q802	E-7
IC801	E-8	Q803	G-3
IC802	E-9	Q804	G-3
IC803	E-10	Q805	E-10
IC804	A-13	Q806	E-10
IC805	A-14	Q807	E-10
IC806	B-14	Q808	E-10
IC901	B-7	Q809	E-10
IC902	D-10	Q810	E-10
IC903	D-9	Q811	E-11
IC904	G-2	Q812	E-11
		Q818	F-10
Q101	E-14	Q819	F-10
Q102	B-13	Q820	F-10
Q103	C-14	Q822	D-9
Q104	D-13	Q823	D-9
Q106	D-12	Q824	F-7
Q107	D-12	Q826	D-8
Q108	E-12	Q829	E-7
Q111	D-11	Q901	B-8
Q201	E-14	Q904	D-6
Q202	B-12	Q905	D-6
Q204	D-13	Q906	E-9
Q203	C-14	Q907	D-9
Q206	C-12	Q908	G-4
Q207	C-13	Q909	G-4
Q208	E-12	Q910	G-5
Q211	E-11	Q911	G-5
Q301	B-12		
Q302	B-12		

Note:

- : Pattern on the side which is seen.
- : Pattern of the rear side.
- G : German model
- IT : Italian model

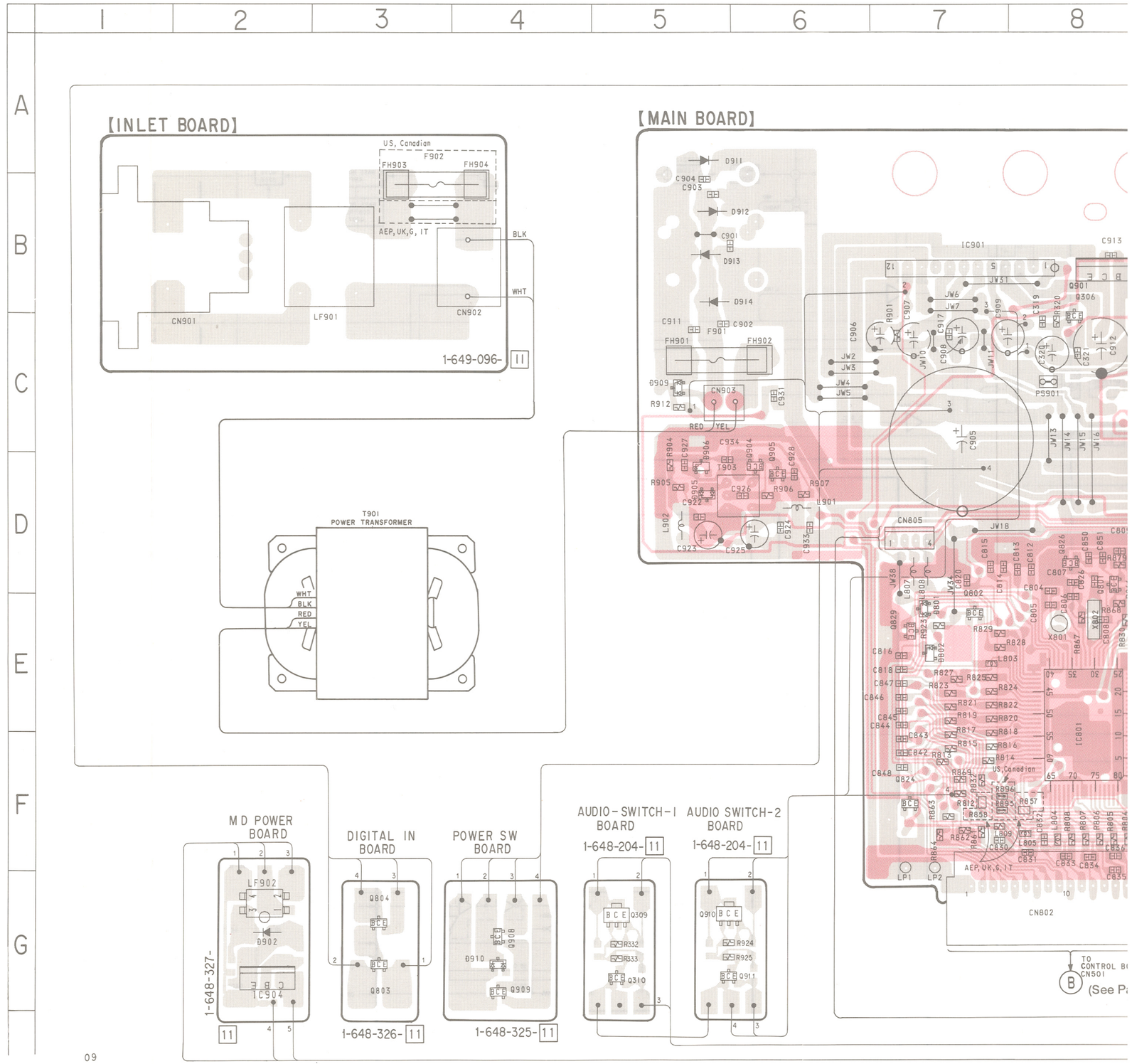

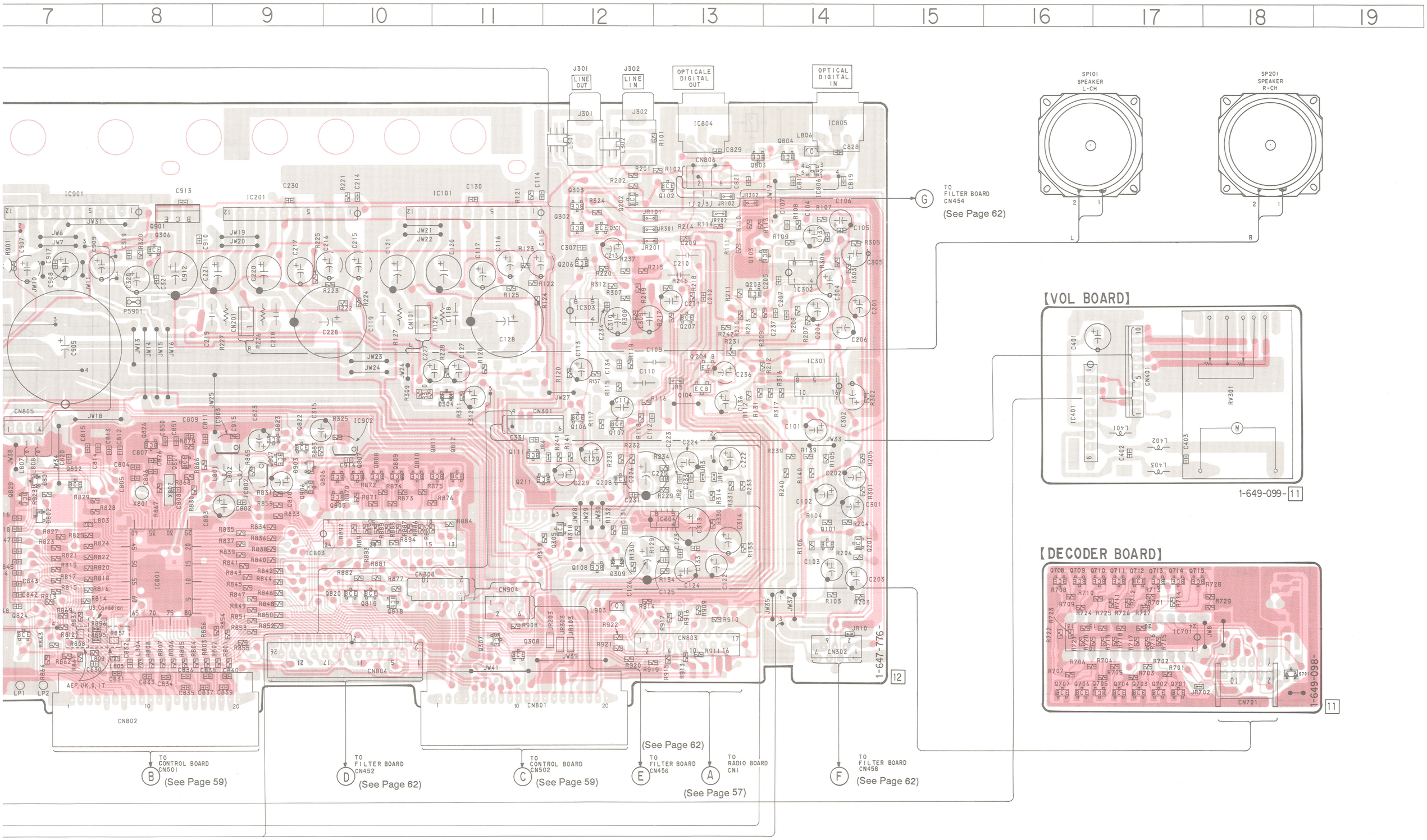
7
8
9
10
11
12
13
14
15
16
17
18
19
J301
LINE OUT
J302
LINE IN
OPTICALE DIGITAL OUT
OPTICAL DIGITAL IN
SP101 SPEAKER L-CH
SP201 SPEAKER R-CH
TO FILTER BOARD CN454
(See Page 62)
[VOL BOARD]
1-649-099-11
[DECODER BOARD]
1-649-098-11
1-647-776-12
TO CONTROL BOARD CN501
(See Page 59)
TO FILTER BOARD CN452
(See Page 62)
TO CONTROL BOARD CN502
(See Page 59)
(See Page 62)
TO FILTER BOARD CN456
TO RADIO BOARD CN1
(See Page 57)
TO FILTER BOARD CN458
(See Page 62)

4-5. SCHEMATIC DIAGRAMS

- **MAIN SECTION 1 (MAIN, DECODER, VOL and INLET board)**
- **See page 92, 93 for IC Block Diagrams.**

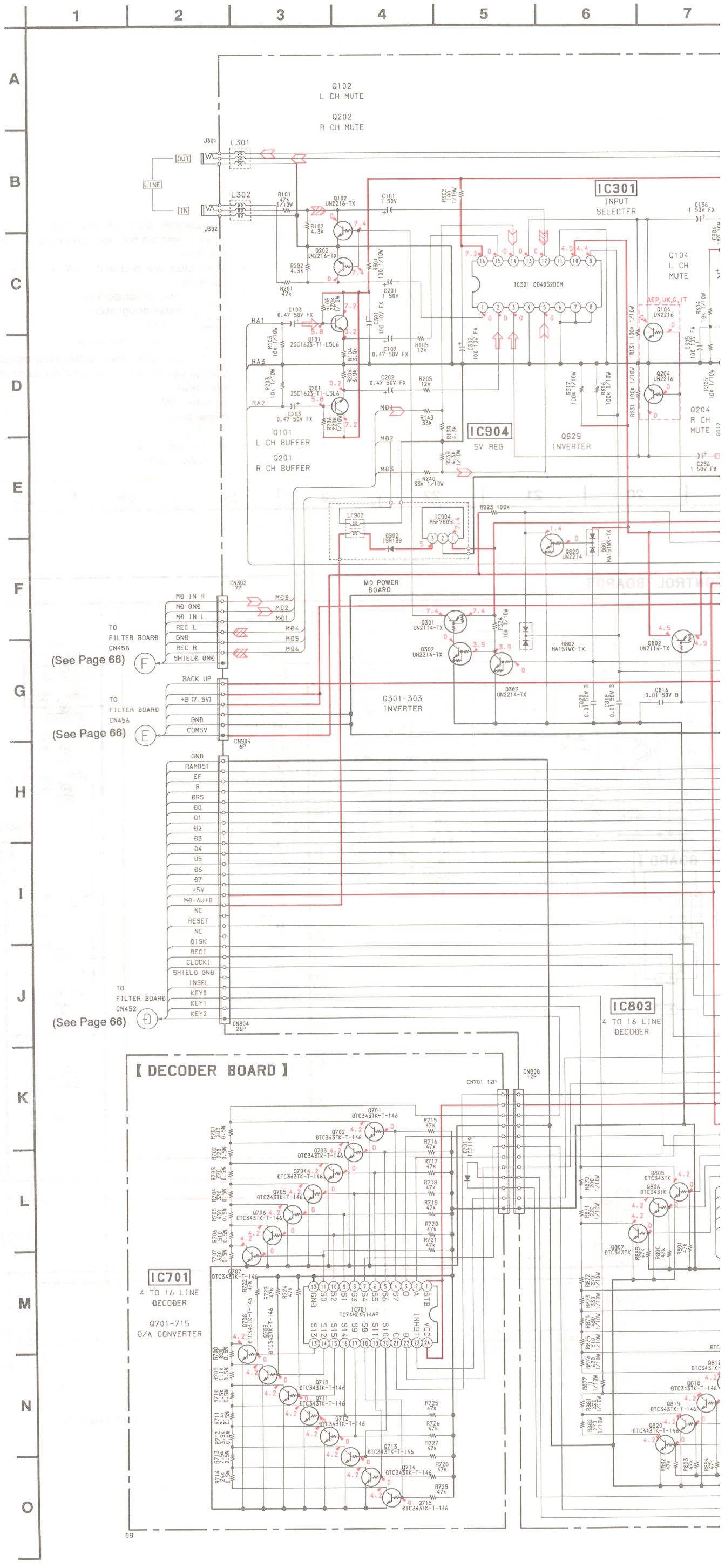

Note:

- All capacitors are in µF unless otherwise noted. pF:µµF 50WV or less are not indicated except for electrolytics and tantalums.
- All resistors are in Ω and 1/4W or less unless otherwise specified.
- : fusible resistor.
- : Panel designation.

Note:	**Note:**
The components identified by mark ⚠ or dotted line with mark ⚠ are critical for safety. Replace only with part number specified.	Les composants identifiés par une marque ⚠ sont critiques pour la sécurité. Ne les remplacer que par une pièce portant le numéro spécifié.

- : B+ Line
- : adjustment for repair.
- Voltages are taken with a VOM (Input impedance 10Ω). Voltage variations may be noted due to normal production tolerances. no mark : FM
- Signal path.
  : PB (ANALOG OUT) : PB (DIGITAL OUT)
  : REC (ANALOG IN) : REC (DIGITAL IN)
  : FM
- G : German model
- IT : Italian model

【 VOL BOARD 】

IC301 INPUT SELECTER

IC302 (1/2) NJM2100M

IC302 +23dB AMP

IC302 (2/2) NJM2100M

IC303 BASS BOOST AMP

IC303 (1/2) M5218AFP-T1

IC303 (2/2) M5218AFP-T1

IC304 HEADPHONE AMP

IC304 (1/2) M5216FP-T1

IC401 VOL. MOTOR DRIVE

IC401 BA6208

IC801 SYSTEM CONTROL

IC801 CXP84120-CF8X100

IC802 RESET SWITCH

IC803 4 TO 16 LINE DECODER

IC901 REG.

Q901 9V REG.

Q104 L CH MUTE

Q204 R CH MUTE

Q829 INVERTER

Q824 INVERTER

Q106 L CH MUTE Q206 R CH MUTE

Q107 L CH BASS BOOST CONTROL

Q207 R CH BASS BOOST CONTROL

Q111 L CH MUTE

Q211 R CH MUTE

Q802 INVERTER

Q822, 310 MUTE CONT

Q309, 310 9V SW

Q306 9V SW

AUDIO SWITCH-I BOARD

Q805-812 Ð/A CONVERTER

Q818-820 Ð/A CONVERTER

Q801, 826 FREQUENCY SHIFT SW

AEP, UK, G, IT

US, Canadian

CN301 6P — LCH IN, RCH IN, GNÐ, LCH OUT, RCH OUT, GNÐ

CN401 10P

CN805 4P

CN808 12P

CN803 17P — RCH, LCH, AGNÐ, 7.5V, RADIO H, COM5V, ÐGNÐ, ST, SÐ, BMUTE, ÐATA I, CLK, ÐATA O, CE, S.GNÐ, 30V, 5V

CN802 20P — BL.GNÐ, BLCONT, 9/10K, RMC, KEY0, KEY1, KEY2, KEY3, E, R/W, RS, ÐB0, ÐB1, ÐB2, ÐB3, ÐB4, ÐB5, ÐB6, ÐB7, BU+5.0V

CN801 20P — NC, NC, Ð.GNÐ, REC1, INSEL, LCD+B, COM5V, STANÐBYLED, RESET, HPSW, HP.R

A TO CONTROL BOARÐ CN1 (See Page 55)

B TO CONTROL BOARÐ CN501 (See Page 55)

C TO CONTROL BOARÐ CN502 (See Page 56)

15 16 17 18 19 20 21 22 23 24 25 26

【 VOL BOARD 】

RV301 VOLUME

CN401 10P

W301 6P

LCH IN
RCH IN
GND
LCH OUT
RCH OUT
GND

IC401 BA6208

VOL. MOTOR DRIVE

CN805 4P

IC304 HEADPHONE AMP

IC304 (1/2) M5216FP-T1

IC304 (2/2) M5216FP-T1

Q108 L CH MUTE
Q208 R CH MUTE

IC101 μPC2505H-1

IC101 L CH POWER AMP

CN101 2P

SP101 LCH SPEAKER

SP201 RCH SPEAKER

CN201 2P

IC201 μPC2505H-1

IC201 R CH POWER AMP

Q305 UN221E-TX
Q305 POWER ON MUTE

Q308 UN2114-TX
Q307 UN2214-TX
Q307, 308 HP SWITCH

Q309 2SB1132
Q306 9V SW

IC901 REG.

IC901 BA3924-V3

Q306 2SC1623

Q901 2SB1370-EF
Q901 9V REG.

D911-914 F5060

F901 T6.3AL

CN903 2P

【 INLET BOARD 】

T901 POWER TRANSFORMER

F902 2A

CN902 2P

US, Canadian

AEP, UK, G, IT

LF901

CN901

AC IN

Q909 MA151WK-TX

AUDIO SWITCH-2 BOARD

Q910 ISS119
Q908 UN2114
Q909 UN2214

Q908, 909 SWITCH

PS901 CCP2E20

Q911 UN2214

Q910 2SB1132

POWER SW BOARD

IC902 S-81250HG-Z

IC902 +5V REG.

IC903 S-81250HG-Z

IC903 +5V REG.

Q906 UN2114-TX

BACK UP

Q903 MA151WK-TX

Q907 UN2214-TX

Q910, 911 7.5V SW

Q906, 907 +B SW

IC805 OPTICAL DIGITAL IN

IC804 OPTICAL DIGITAL OUT

DIGITAL IN BOARD

Q804 UN2214
Q803 UN2214

IC806 TC7S08F

IC805 TORX178

IC804 TOTX178

IN
OPTICAL DIGITAL
OUT

Q904 2SC1623-T1-L5L6

Q905 2SC1623-T1-L5L6

Q904, 905 DC/DC CONVERTER

Q803, 804 SWITCH

IC806 SWITCH

CN801 20P

CN806 6P

【 MAIN BOARD 】

C TO CONTROL BOARD CN502
(See Page 56)

G TO FILTER BOARD CN454
(See Page 66)

4-6. SCHEMATIC DIAGRAMS

- **MAIN SECTION 2 (CONTROL, CONTROL UNIT, RELAY, RADIO, ANTENNA TERMINAL and LOOP ANTENNA board)**
- **See page 92, 93 for IC Block Diagrams.**

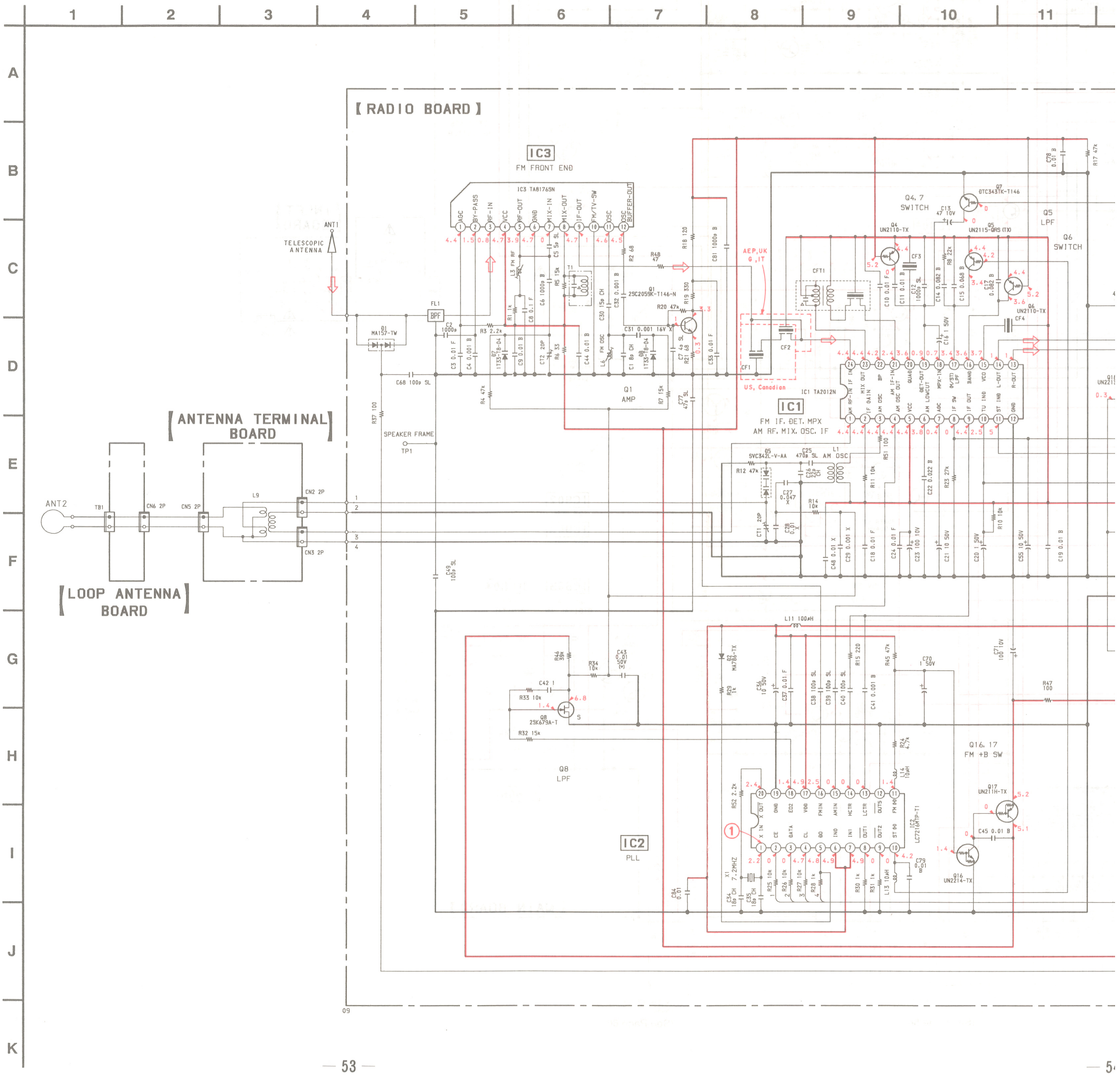

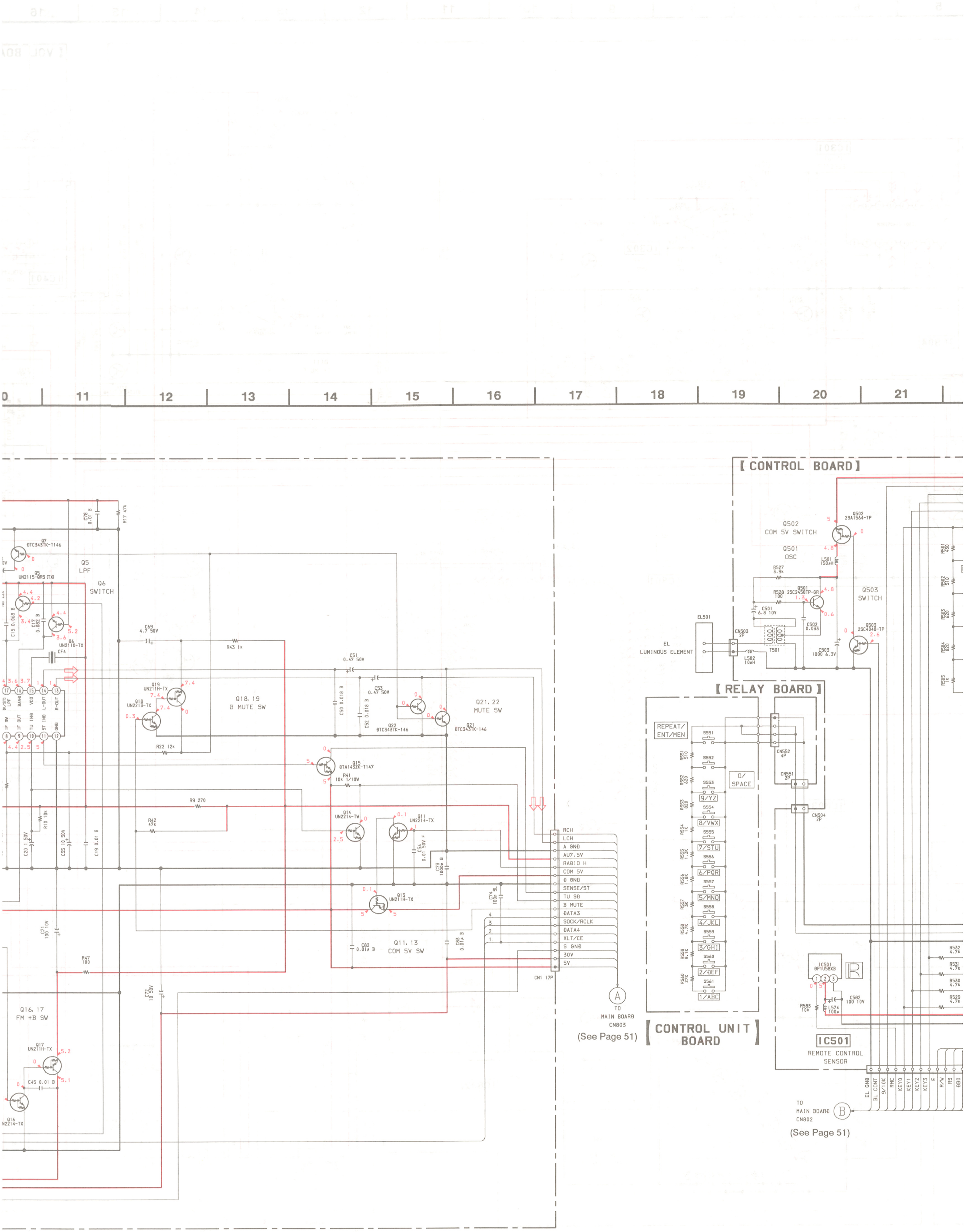
【 CONTROL BOARD 】
Q502
COM 5V SWITCH
Q501
OSC
Q503
SWITCH
Q5
LPF
Q6
SWITCH
Q18, 19
B MUTE SW
Q21, 22
MUTE SW
Q11, 13
COM 5V SW
Q16, 17
FM +B SW
【 RELAY BOARD 】
REPEAT/
ENT/MEN
0/
SPACE
9/YZ
8/VWX
7/STU
6/PQR
5/MNO
4/JKL
3/GHI
2/DEF
1/ABC
【 CONTROL UNIT
BOARD 】
EL
LUMINOUS ELEMENT
IC501
REMOTE CONTROL
SENSOR
RCH
LCH
A GND
AU7.5V
RADIO H
COM 5V
D GND
SENSE/ST
TU SD
B MUTE
DATA3
SCK/RCLK
DATA4
XLT/CE
S GND
30V
5V
CN1 17P
TO
MAIN BOARD
CN803
(See Page 51)
TO
MAIN BOARD
CN802
(See Page 51)
EL GND
BL CONT
9/10K
RMC
KEY0
KEY1
KEY2
KEY3
E
R/W
RS
DBD

Note:

- All capacitors are in µF unless otherwise noted. pF:µµF 50WV or less are not indicated except for electrolytics and tantalums.
- All resistors are in Ω and 1/4W or less unless otherwise specified.
- △ : internal component.
- ▭ : Panel designation.
- ▬ : B+ Line
- ▭ : adjustment for repair.
- Voltages are taken with a VOM (Input impedance 10Ω). Voltage variations may be noted due to normal production tolerances.
  no mark : FM
- Signal path.
  ⇨ : FM
- G : German model
- IT : Italian model

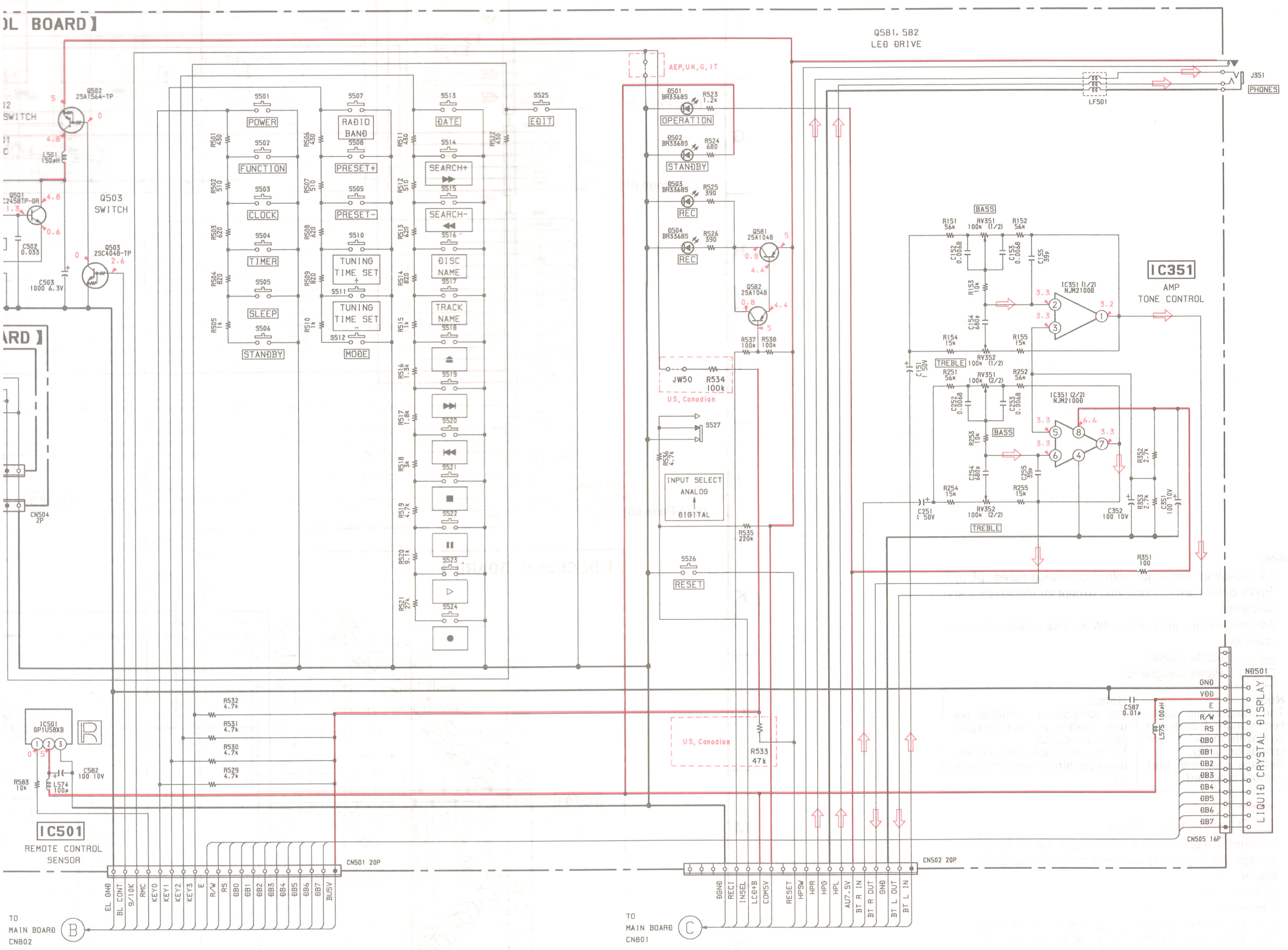

See Page 51)

(See Page 51)

4-7. PRINTED WIRING BOARDS

- **MAIN SECTION 2 (CONTROL, CONTROL UNIT, RELAY, RADIO, ANTENNA TERMINAL and LOOP ANTENNA board)**
- **See page 37 for Circuit Boards Location and see page 91 for Semiconductor Lead Layouts.**

- **Semiconductor Location**

Ref. No.	Location
D1	G-4
D2	F-1
D5	E-2
D7	H-4
D8	H-2
D501	E-14
D502	E-14
D503	E-14
D504	E-13
IC1	F-4
IC2	F-2
IC3	H-3
IC351	F-15
IC501	E-15
Q1	H-2
Q4	F-4
Q5	F-4
Q6	F-4
Q7	E-4
Q8	F-3
Q11	D-3
Q13	D-3
Q14	E-2
Q15	D-2
Q16	G-1
Q17	G-1
Q18	E-4
Q19	E-4
Q21	D-3
Q22	D-3
Q501	F-9
Q502	D-9
Q503	D-9
Q581	E-13
Q582	E-12

Note:

- ▒ : Pattern on the side which is seen.
- ▒ : Pattern of the rear side.
- G : German model
- IT : Italian model

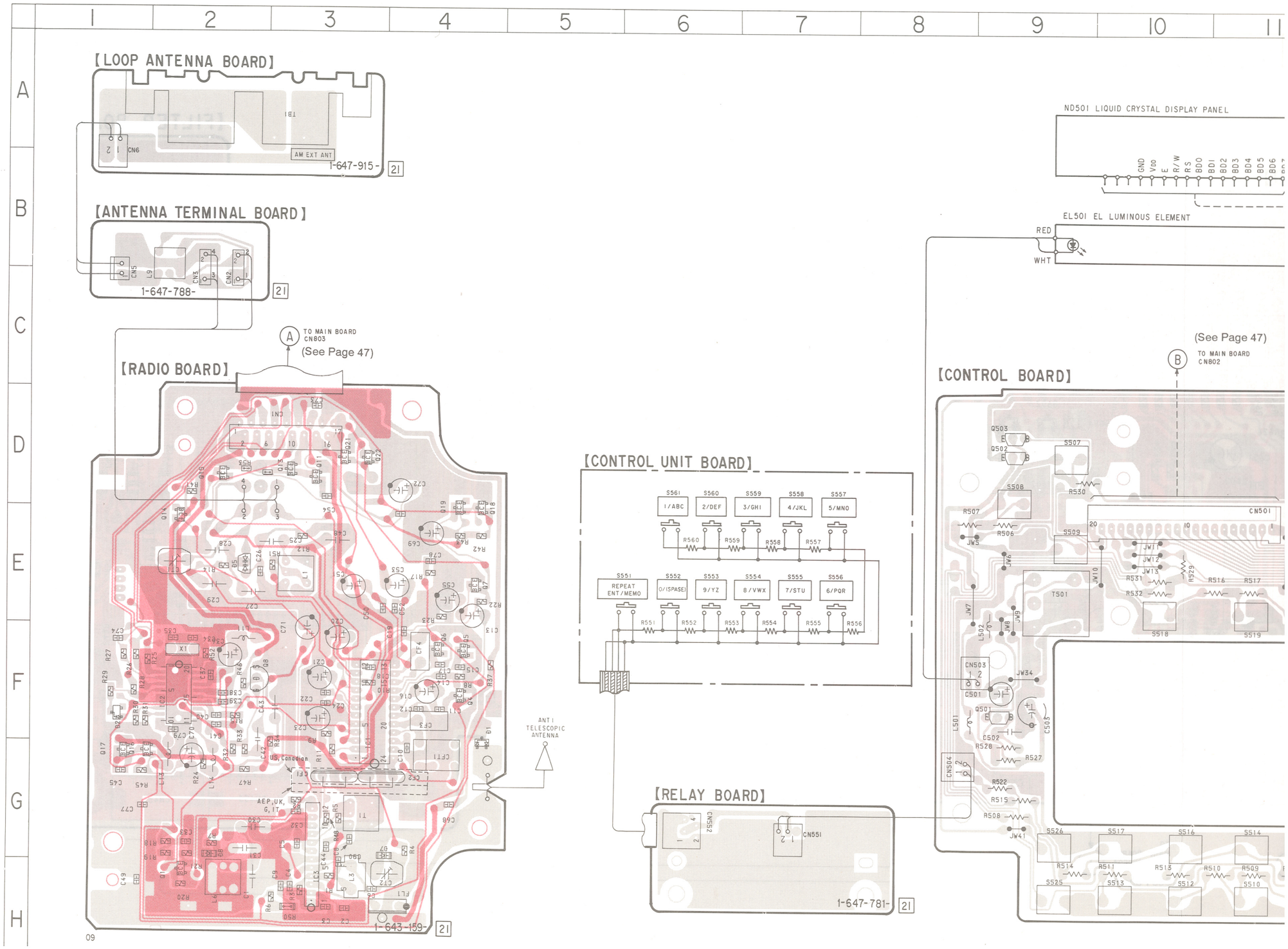

10	11	12	13	14	15	16

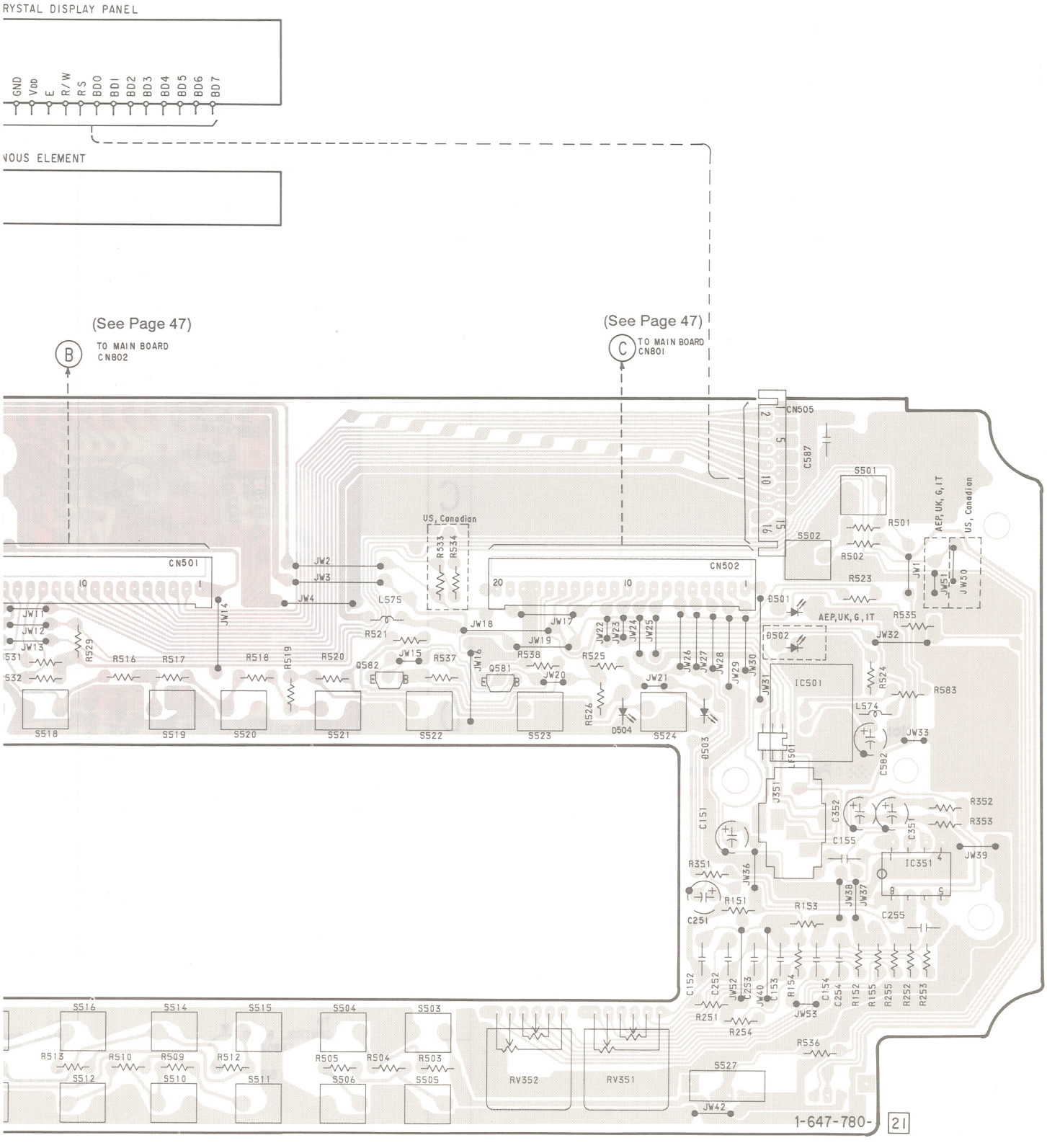

4-8. PRINTED WIRING BOARDS

- MAIN SECTION 3 (IO, FILTER board)
- See page 37 for Circuit Boards Location and see page 91 for Semiconductor Lead Layouts.

• Semiconductor Location

Ref. No.	Location
D401	C-9
D601	C-4
D602	C-3
D603	C-3
IC601	D-2
IC602	D-2
IC603	D-3
IC614	D-1
Q405	D-9
Q601	D-2
Q602	C-3
Q603	C-3
Q604	C-3
Q605	C-3

Note:

- : Pattern on the side which is seen.
- : Pattern of the rear side.

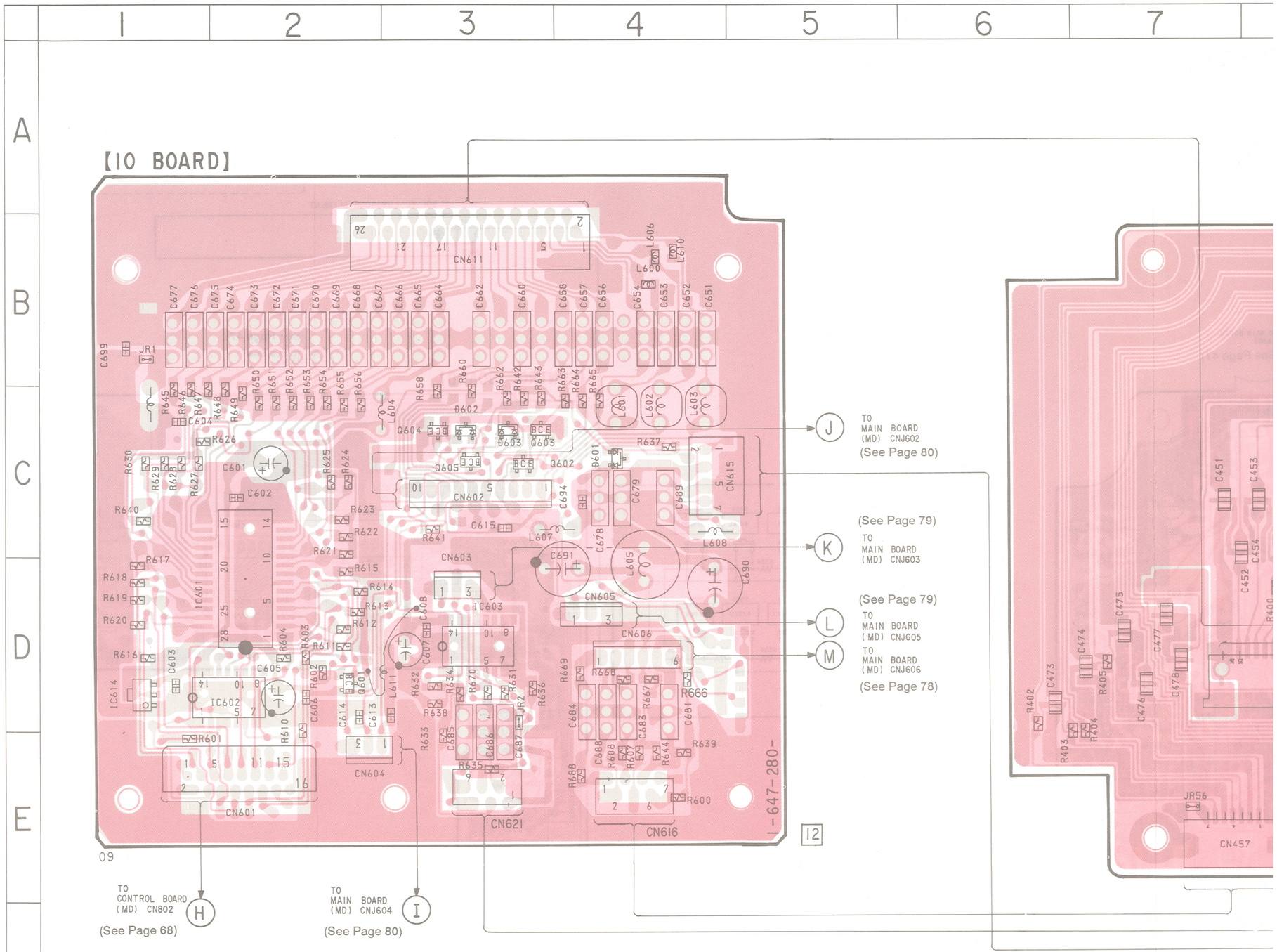

7	8	9	10	11

[FILTER BOARD]

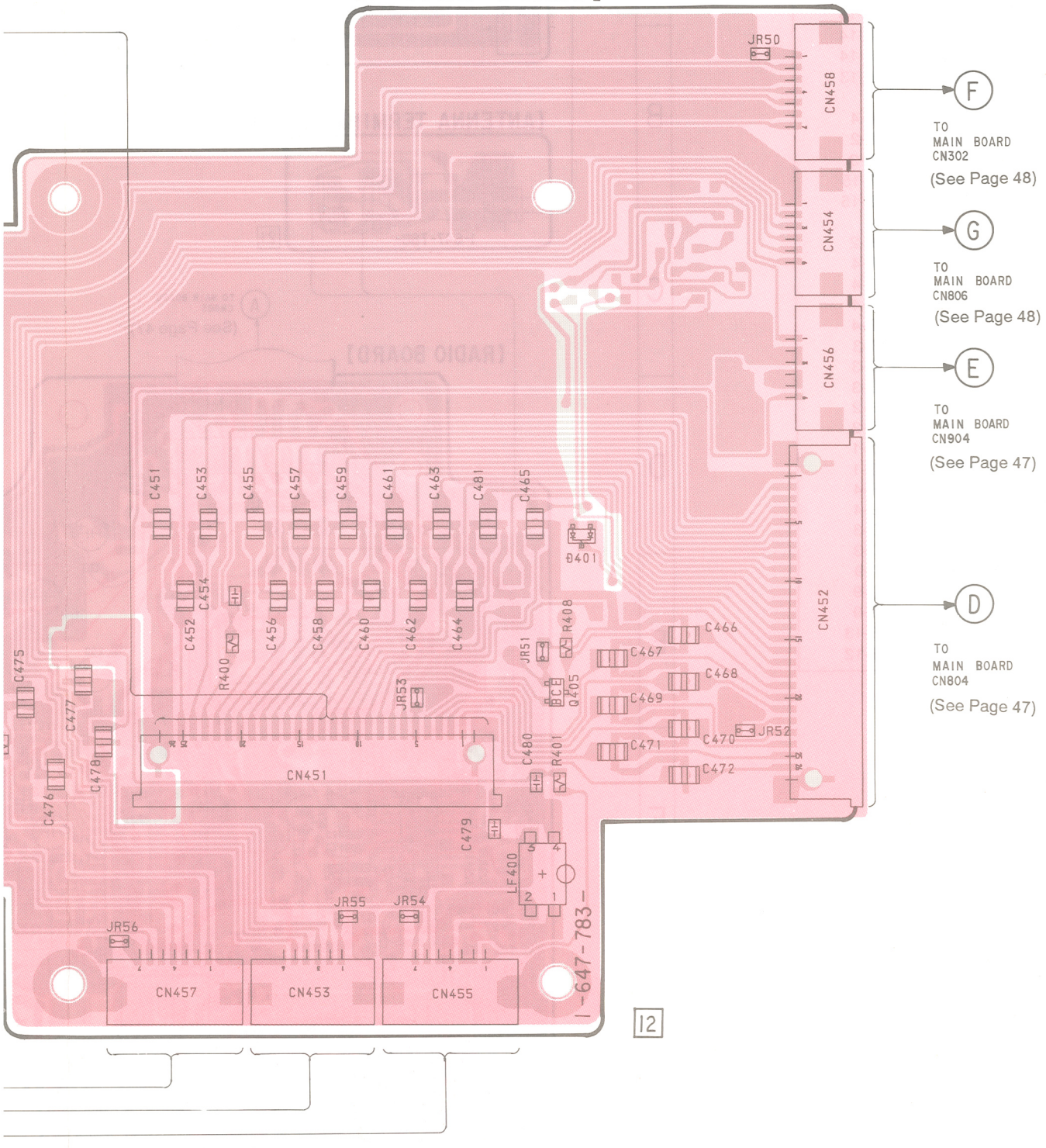

4-10. PRINTED WIRING BOARDS

- **MD SECTION 1 (CONTROL, CLV, POWER (A), POWER (B) and POWER (C) board)**
- **See page 37 for Circuit Boards Location and see page 91 for Semiconductor Lead Layouts.**

• **Semiconductor Location**

Ref. No.	Location	Ref. No.	Location
D402	G-15	Q406	E-11
D404	E-11	Q407	F-12
D405	G-15	Q408	E-12
D407	F-16	Q410	G-13
D410	G-12	Q411	G-15
D411	E-12	Q412	G-13
D412	E-12	Q413	G-13
D413	E-12	Q414	E-13
D414	E-12	Q415	E-13
D415	I-15	Q416	G-15
D416	H-11	Q420	G-17
D417	G-12	Q421	I-13
D418	G-15	Q422	I-14
D419	G-16	Q423	H-12
D901	E-3	Q426	H-16
D902	E-2	Q428	G-16
D903	E-3	Q429	G-11
D904	E-2	Q430	G-16
D905	E-3	Q431	I-12
D906	D-2	Q432	I-16
D907	F-2	Q433	I-13
		Q434	I-14
IC401	G-16	Q435	I-15
IC402	I-15	Q436	G-12
IC403	E-12	Q512	G-6
IC701	C-9	Q901	F-3
IC901	G-1	Q902	F-2
IC902	G-2	Q903	E-3
IC904	E-1	Q904	E-2
IC905	G-3	Q905	G-2
		Q906	F-1
Q403	F-12	Q907	E-1
Q404	E-12	Q908	E-1
Q405	F-11		

Note:

- : Pattern on the side which is seen.
- : Pattern of the rear side.

Caution:
Conductor side (Side B): Parts on the Conductor side seen from the are indicated.
Component side (Side A): Parts on the Component side seen from the Component side are indicated.

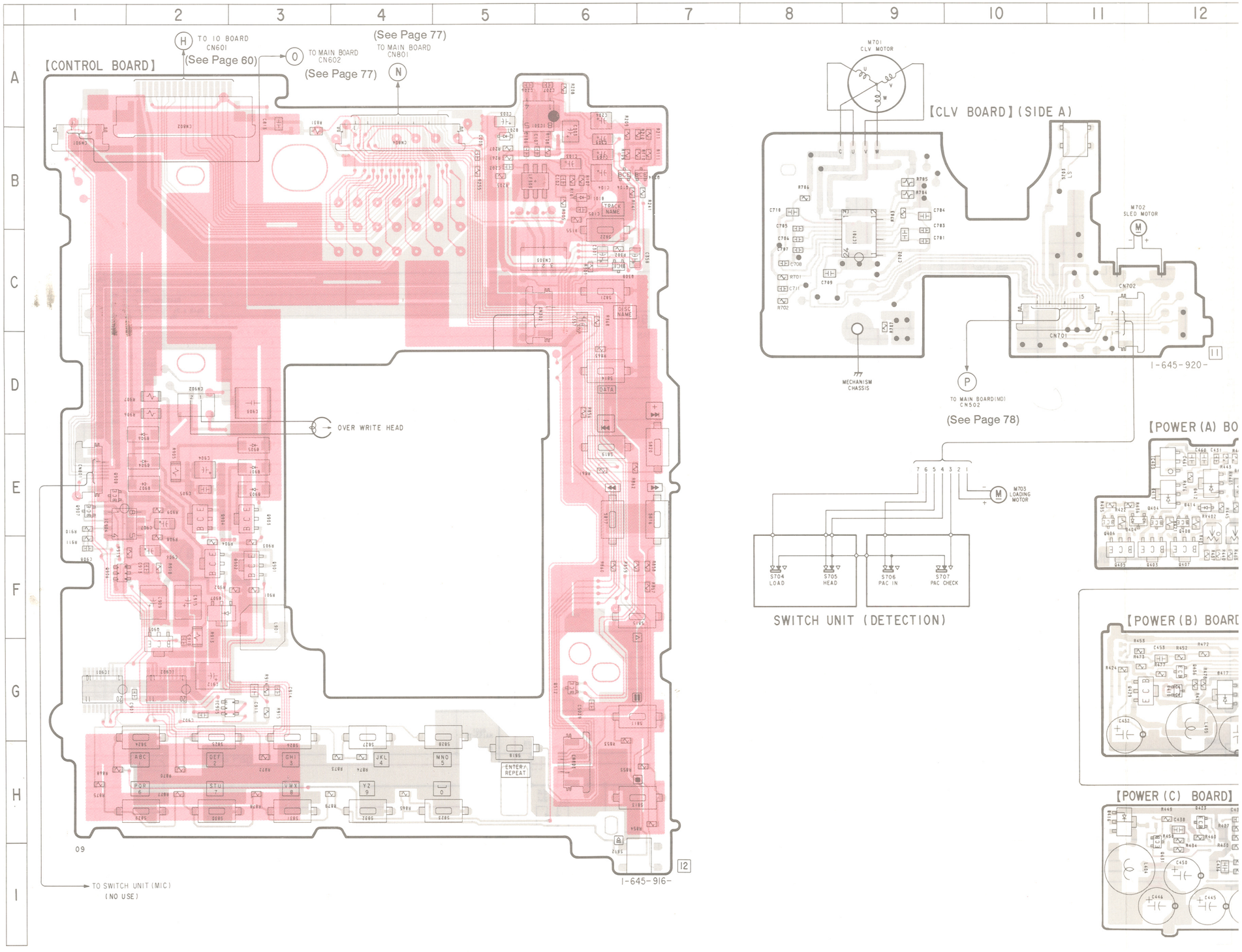

【CLV BOARD】(SIDE B)

(See Page 78)

Q TO MAIN BOARD(MD) CN401

【POWER(A) BOARD】(SIDE A)

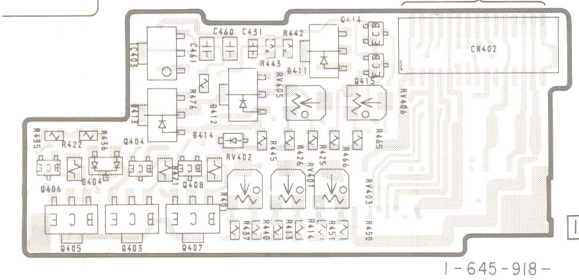

【POWER(A) BOARD】(SIDE B)

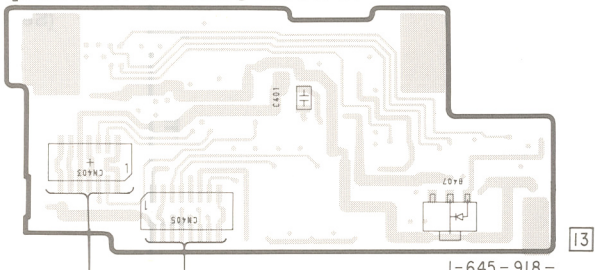

【POWER(B) BOARD】(SIDE A)

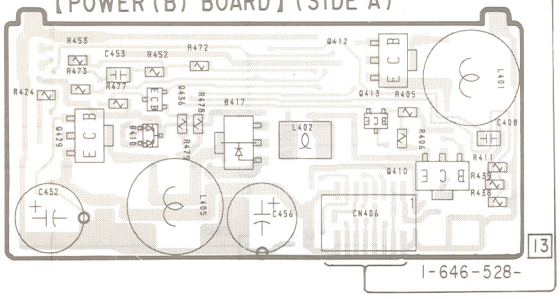

【POWER(B) BOARD】(SIDE B)

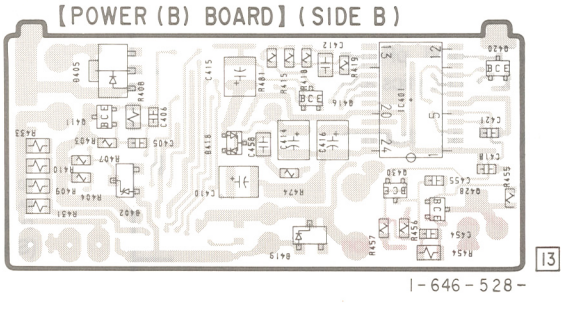

【POWER(C) BOARD】(SIDE A)

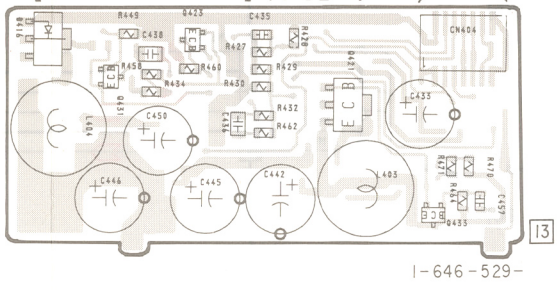

【POWER(C) BOARD】(SIDE B)

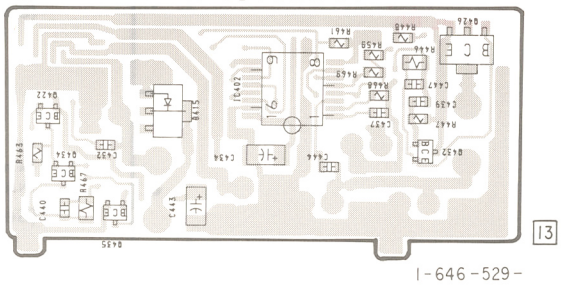

4-9. SCHEMATIC DIAGRAMS

• MAIN SECTION 3 (IO, FILTER board)

Note:

- All capacitors are in µF unless otherwise noted. pF:µµF 50WV or less are not indicated except for electrolytics and tantalums.
- All resistors are in Ω and 1/4W or less unless otherwise specified.
- ▬▬ : B+ Line
- Voltages are taken with a VOM (Input impedance 10Ω). Voltage variations may be noted due to normal production tolerances.
  no mark : FM
- Signal path.
  ▷ : PB (ANALOG OUT) ▷» : PB (DIGITAL OUT)
  ▨▷ : REC (ANALOG IN) ▨▷» : REC (DIGITAL IN)

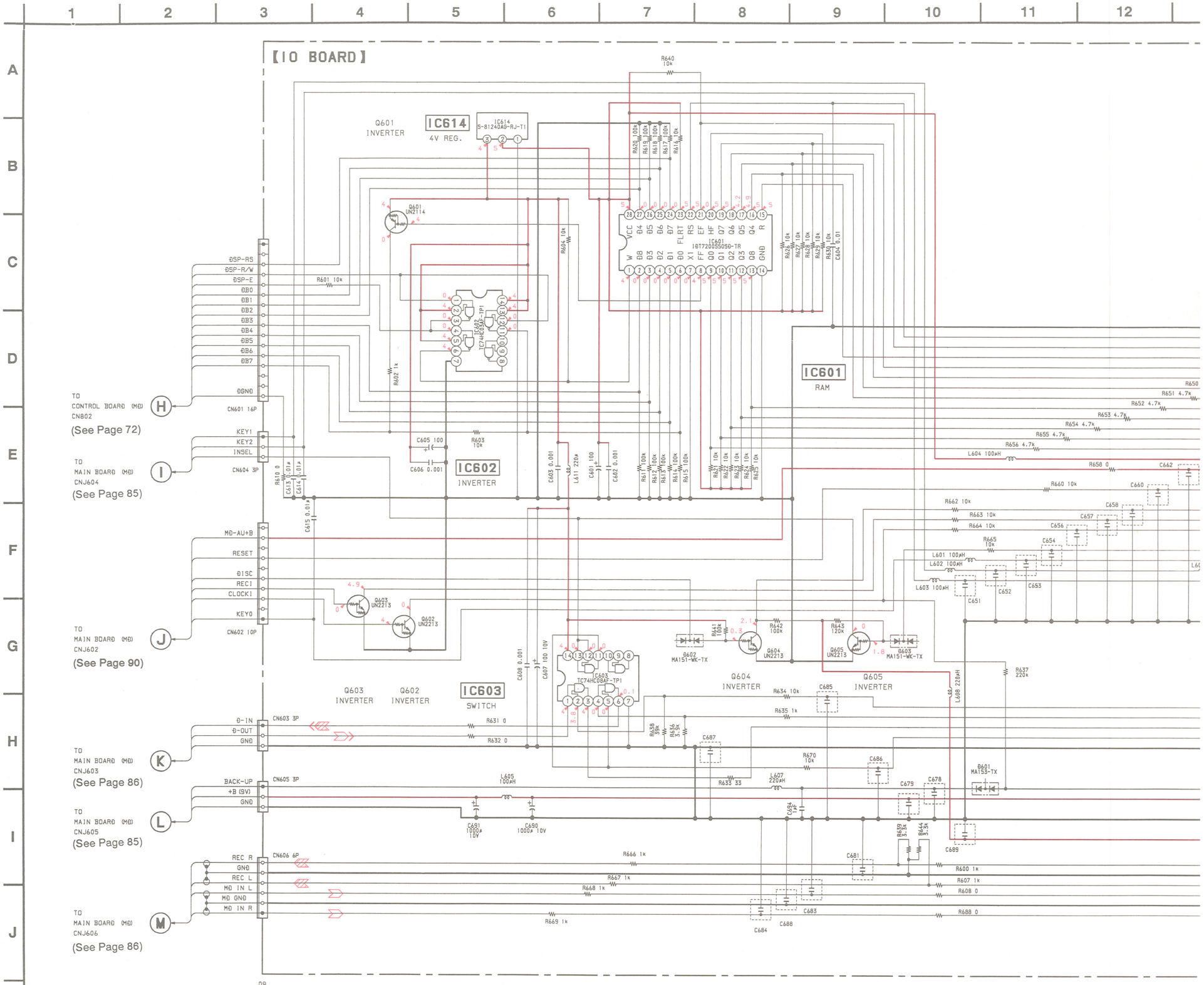

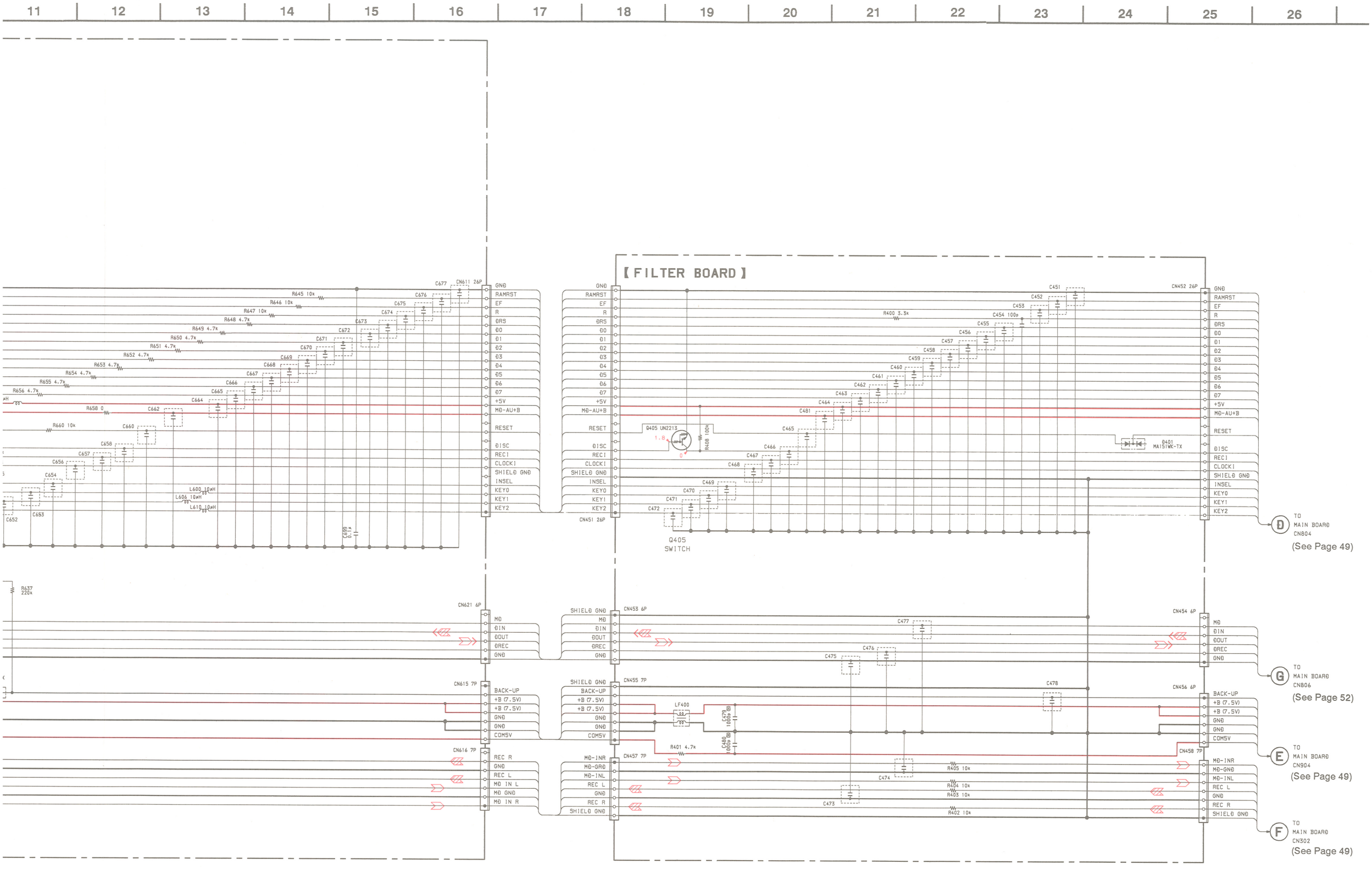
11
12
13
14
15
16
17
18
19
20
21
22
23
24
25
26
【FILTER BOARD】
CN611 26P
CN452 26P
CN451 26P
CN621 6P
CN453 6P
CN454 6P
CN615 7P
CN455 7P
CN456 6P
CN616 7P
CN457 7P
CN458 7P
Q405 UN2213
Q405
SWITCH
LF400
D
TO
MAIN BOARD
CN804
(See Page 49)
G
TO
MAIN BOARD
CN806
(See Page 52)
E
TO
MAIN BOARD
CN904
(See Page 49)
F
TO
MAIN BOARD
CN302
(See Page 49)

4-10. PRINTED WIRING BOARDS

- **MD SECTION 1 (CONTROL, CLV, POWER (A), POWER (B) and POWER (C) board)**
- **See page 37 for Circuit Boards Location and see page 91 for Semiconductor Lead Layouts.**

• **Semiconductor Location**

Ref. No.	Location	Ref. No.	Location
D402	G-15	Q406	E-11
D404	E-11	Q407	F-12
D405	G-15	Q408	E-12
D407	F-16	Q410	G-13
D410	G-12	Q411	G-15
D411	E-12	Q412	G-13
D412	E-12	Q413	G-13
D413	E-12	Q414	E-13
D414	E-12	Q415	E-13
D415	I-15	Q416	G-15
D416	H-11	Q420	G-17
D417	G-12	Q421	I-13
D418	G-15	Q422	I-14
D419	G-16	Q423	H-12
D901	E-3	Q426	H-16
D902	E-2	Q428	G-16
D903	E-3	Q429	G-11
D904	E-2	Q430	G-16
D905	E-3	Q431	I-12
D906	D-2	Q432	I-16
D907	F-2	Q433	I-13
		Q434	I-14
IC401	G-16	Q435	I-15
IC402	I-15	Q436	G-12
IC403	E-12	Q512	G-6
IC701	C-9	Q901	F-3
IC901	G-1	Q902	F-2
IC902	G-2	Q903	E-3
IC904	E-1	Q904	E-2
IC905	G-3	Q905	G-2
		Q906	F-1
Q403	F-12	Q907	E-1
Q404	E-12	Q908	E-1
Q405	F-11		

Note:

- : Pattern on the side which is seen.
- : Pattern of the rear side.

Caution:
Conductor side: (Side B) Parts on the Conductor side seen from the are indicated.
Component side: (Side A) Parts on the Component side seen from the Component side are indicated.

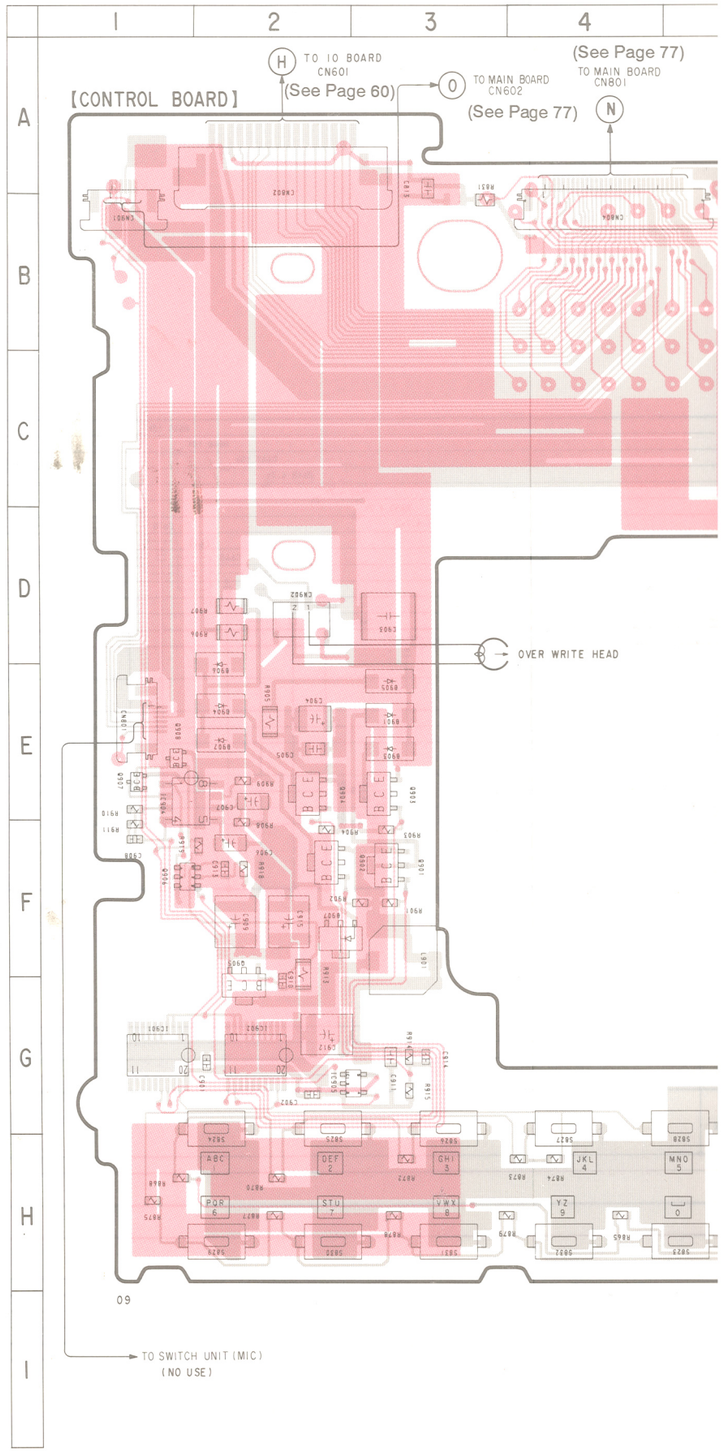

youts.

3	4	5	6	7	8	9	10	11	12	13	14	15	16	17

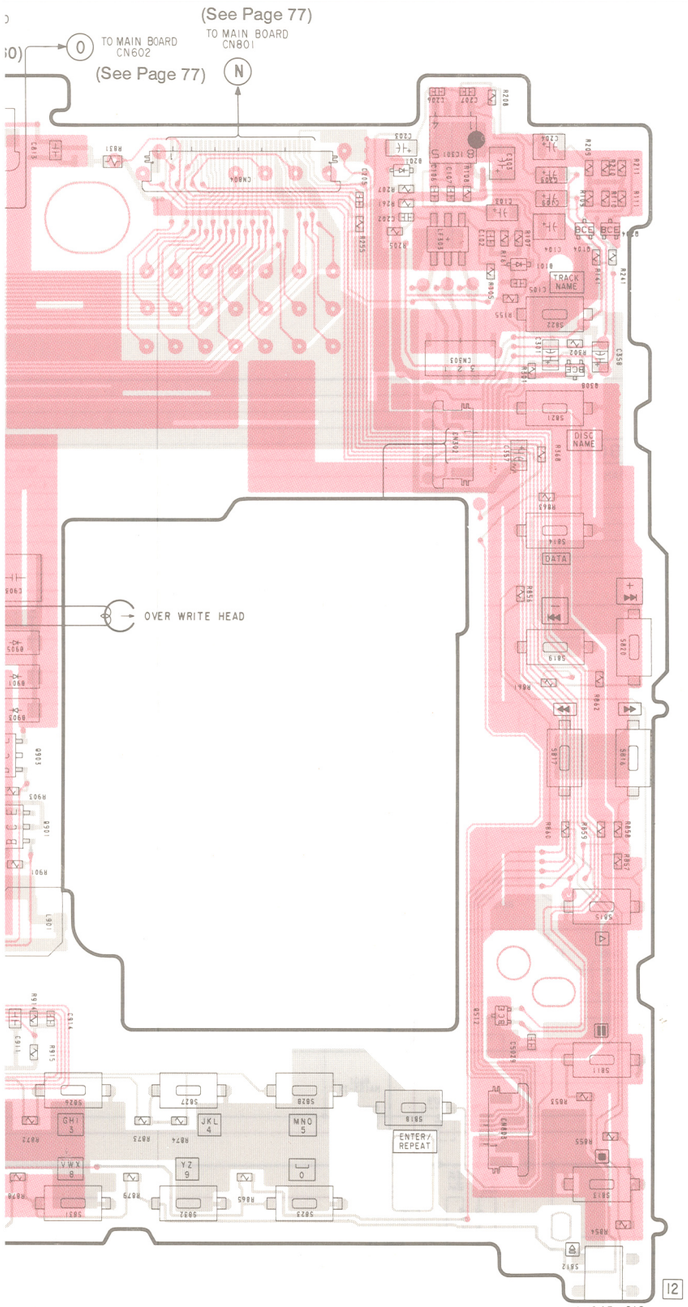

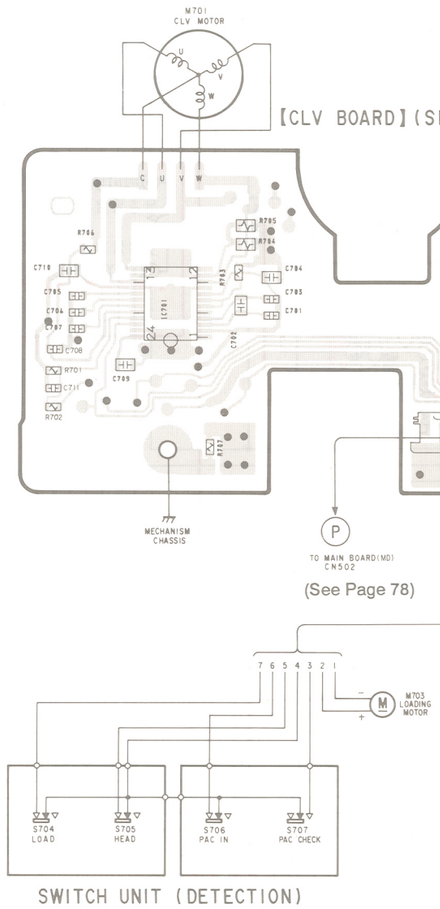

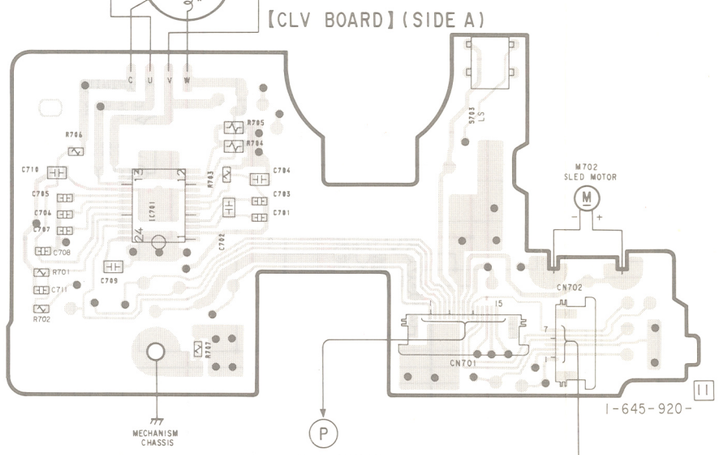

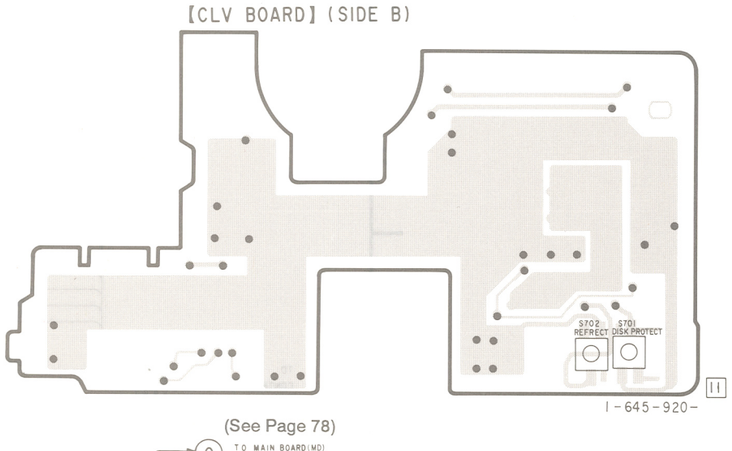

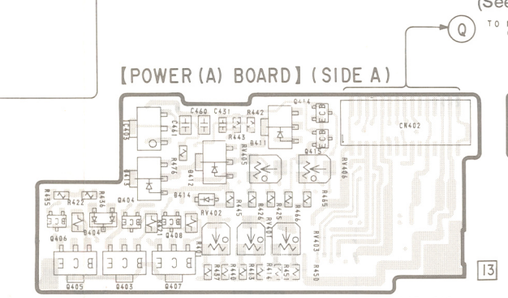

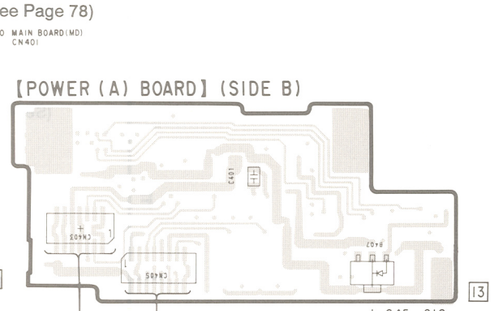

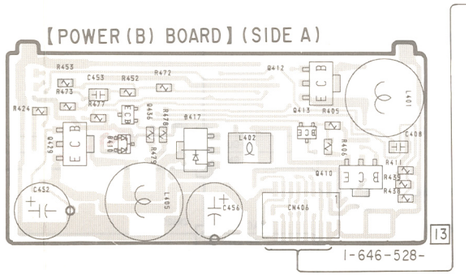

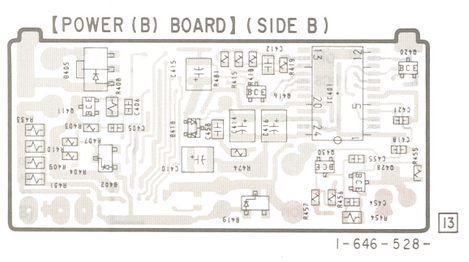

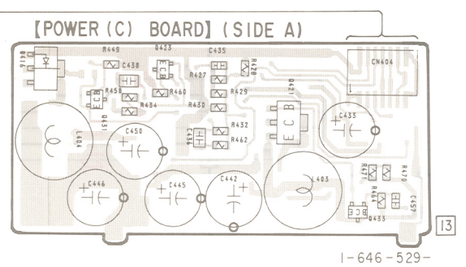

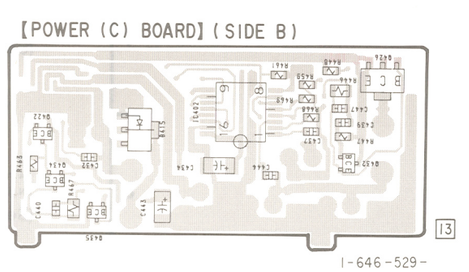

4-11. SCHEMATIC DIAGRAMS

- **MD SECTION 1 (CONTROL, CLV, POWER (A), POWER (B) and POWER (C) board)**
- **See page 94 for IC Block Diagrams.**

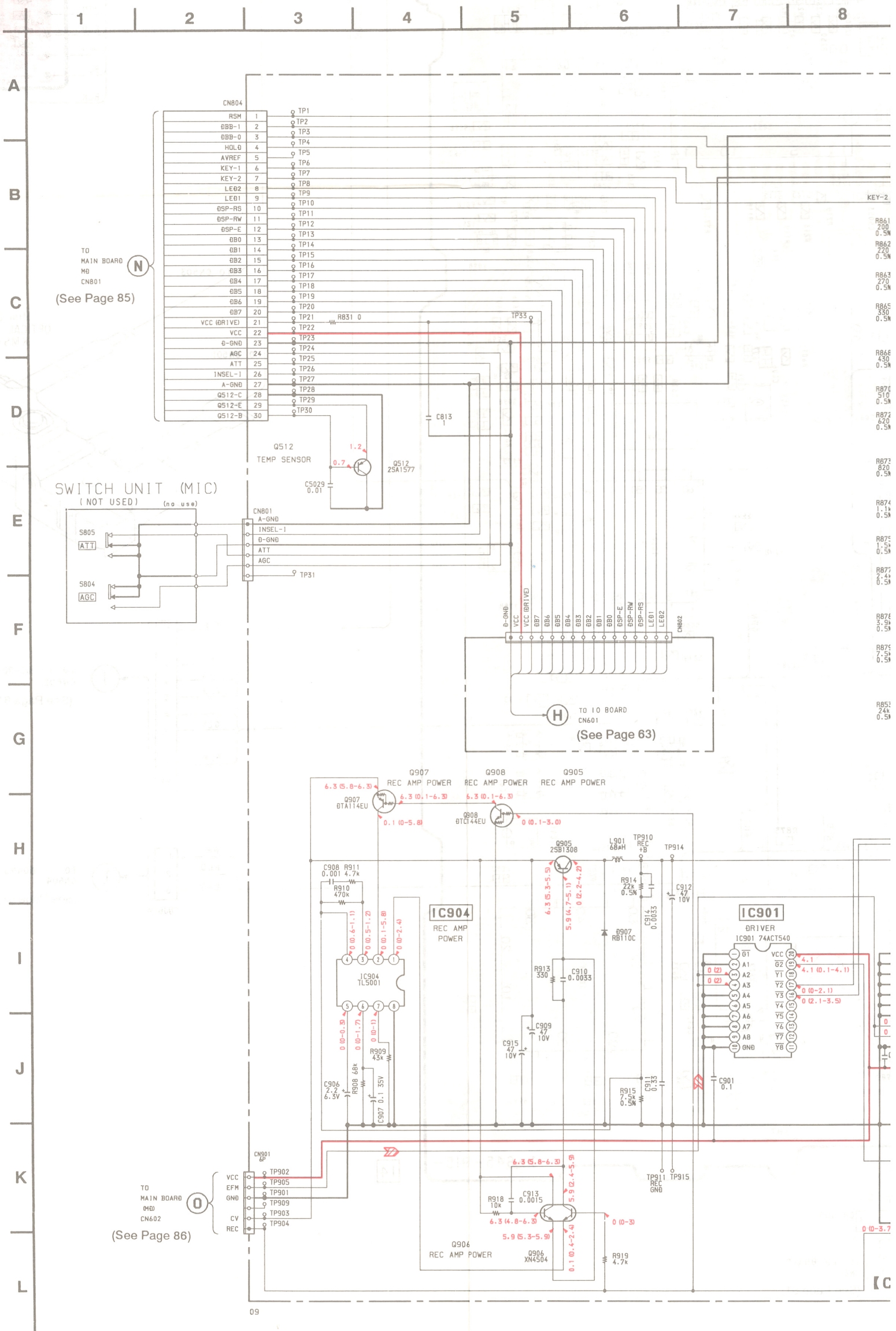

Note:

- All capacitors are in µF unless otherwise noted. pF:µµF 50WV or less are not indicated except for electrolytics and tantalums.
- All resistors are in Ω and 1/4W or less unless otherwise specified.
- % : indicates tolerance.
- ▬▬ : B+ Line
- ▭ : adjustment for repair.
- Voltages are taken with a VOM (Input impedance 10Ω). Voltage variations may be noted due to normal production tolerances.
  no mark : PB
  ( ) : REC
- Signal path.
  ▷ : PB (ANALOG OUT) ▷▷ : PB (DIGITAL OUT)
  ▨▷ : REC (ANALOG IN) ▨▷▷ : REC (DIGITAL IN)

8 | 9 | 10 | 11 | 12 | 13 | 14 | 15 | 16 | 17 | 18 | 19

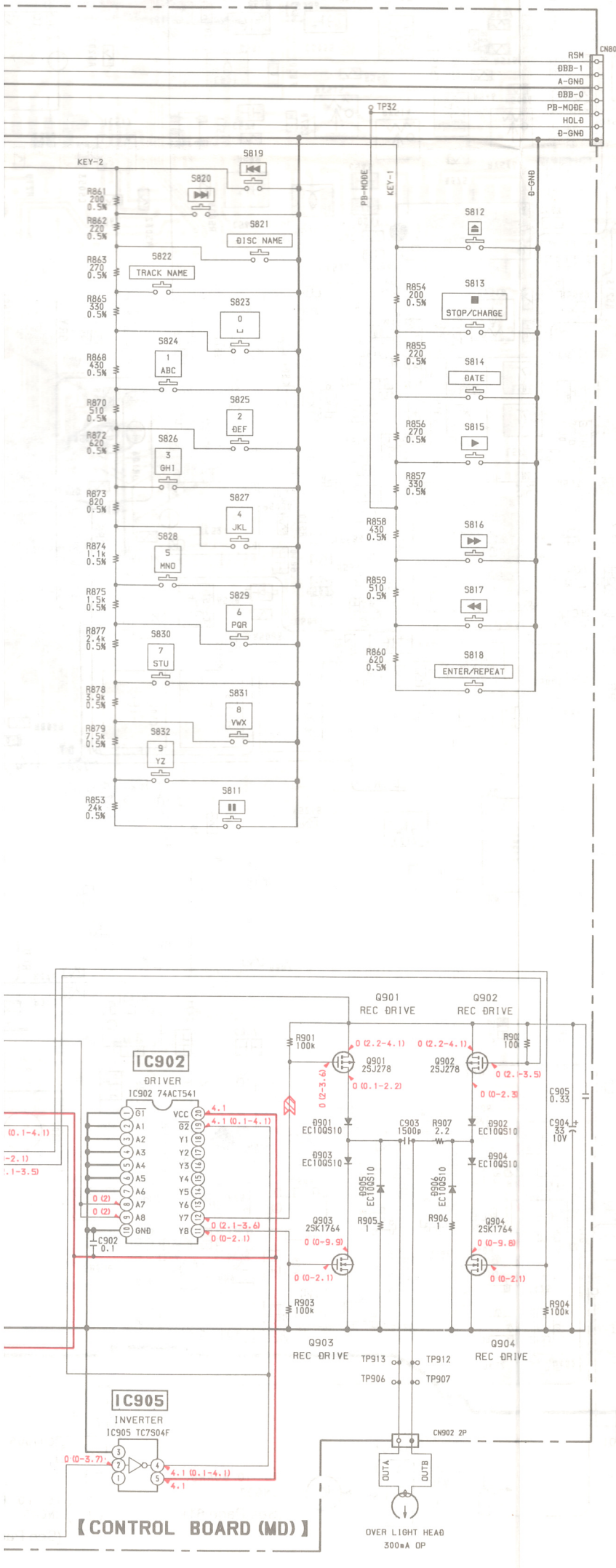

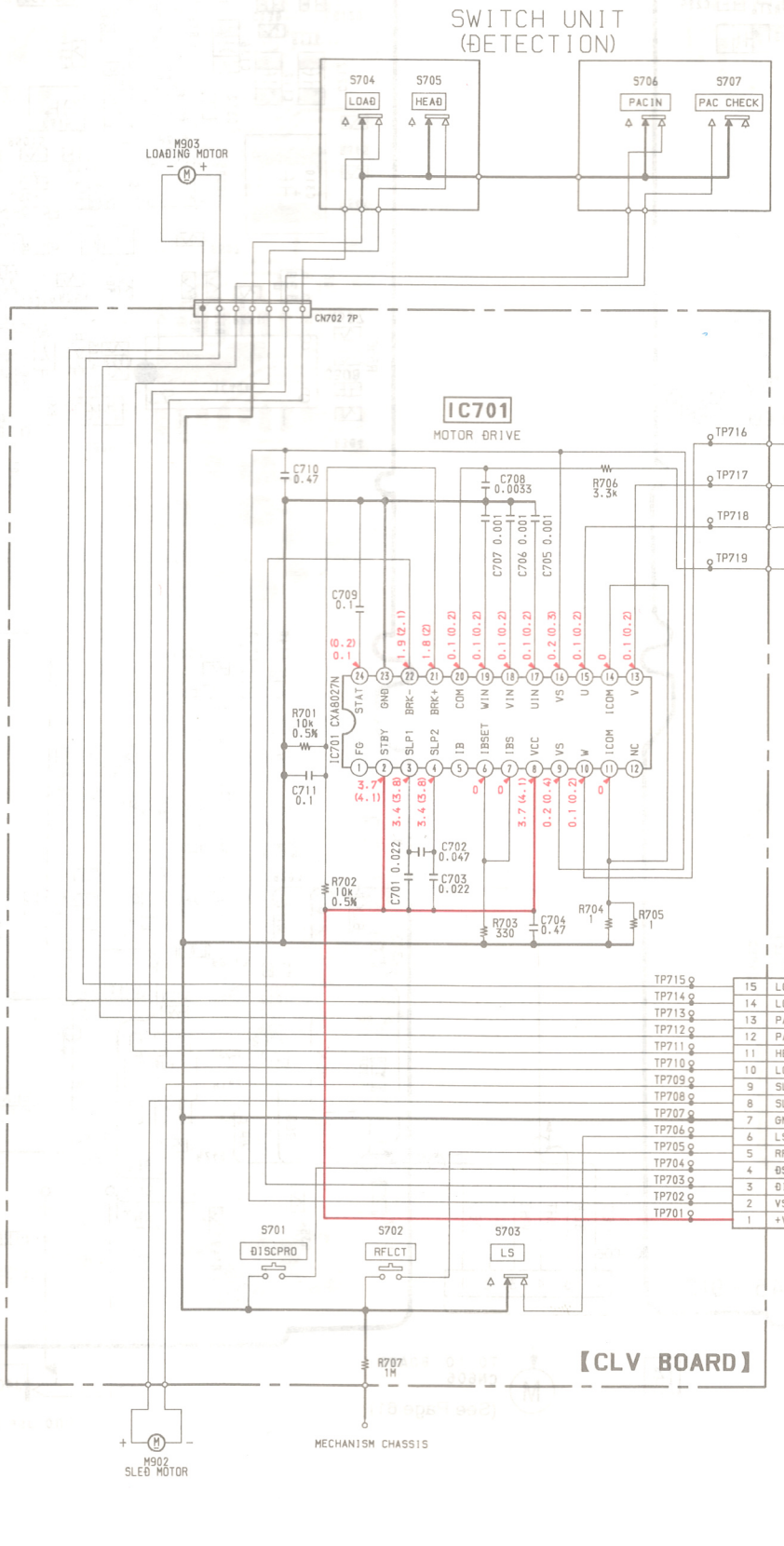

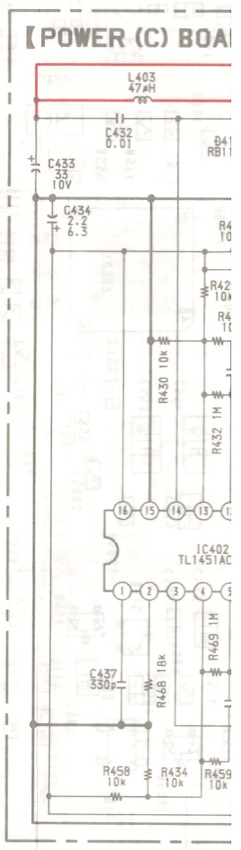

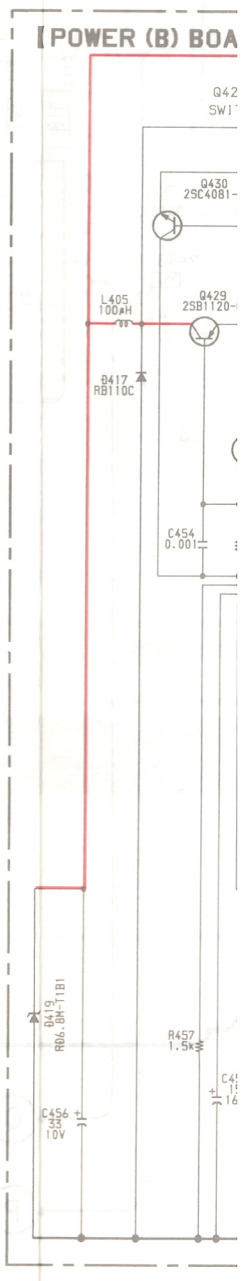

3 | 14 | 15 | 16 | 17 | 18 | 19 | 20 | 21 | 22 | 23 | 24

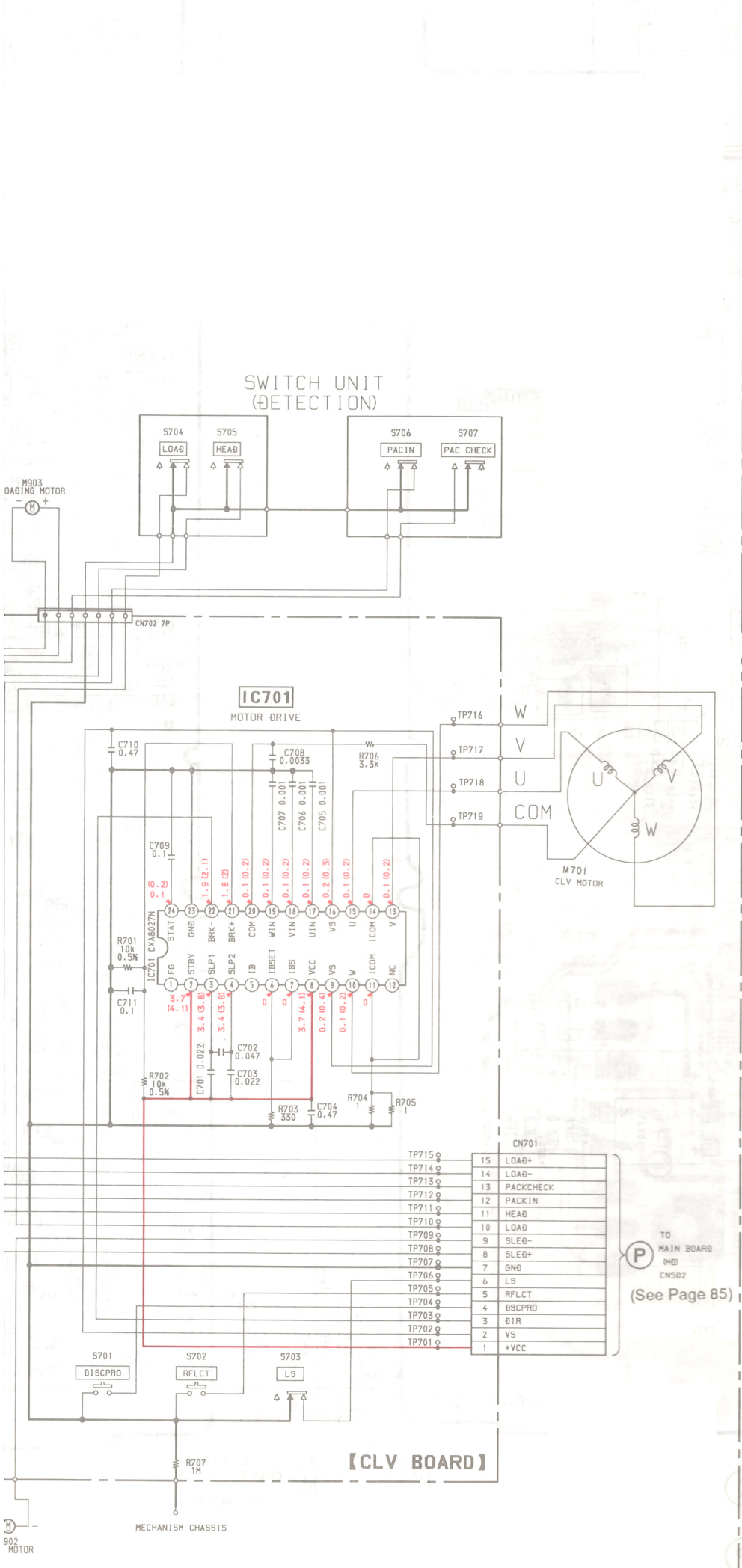

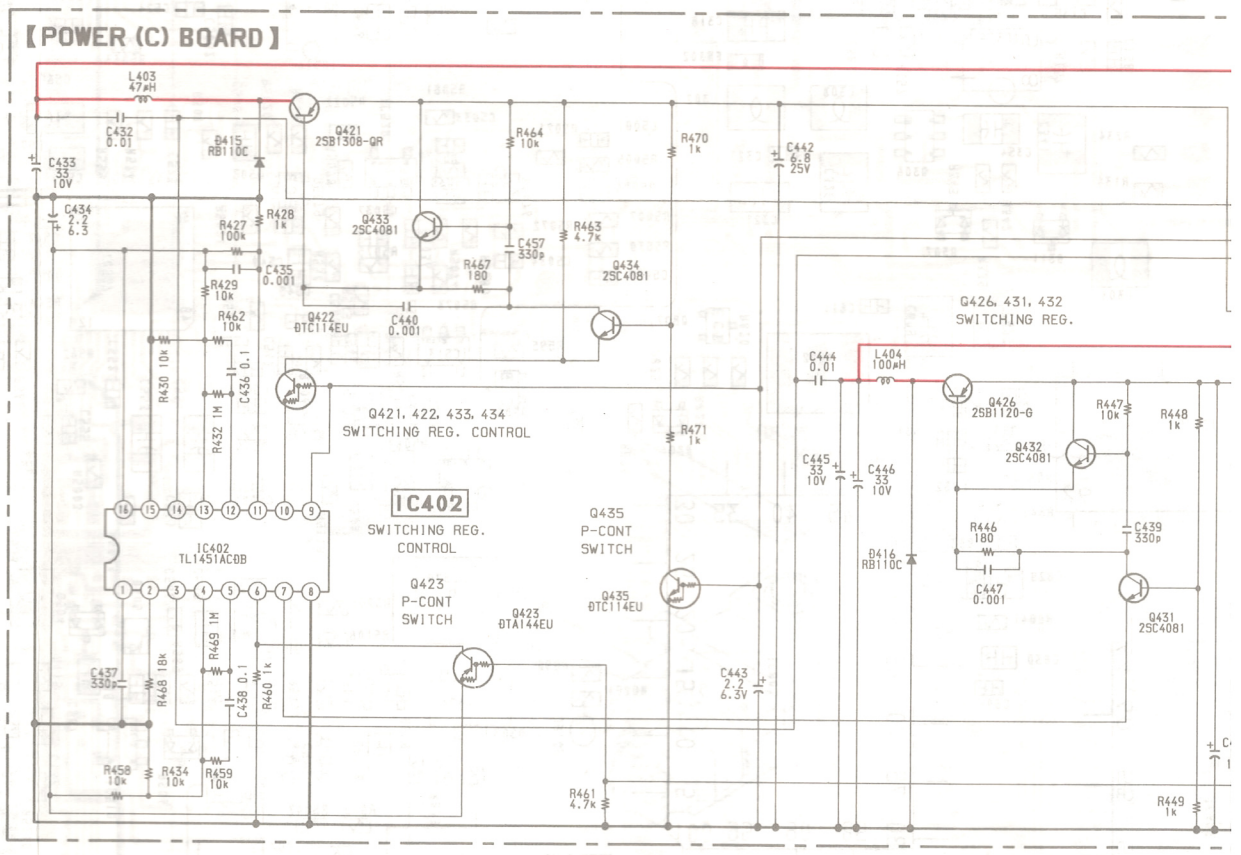

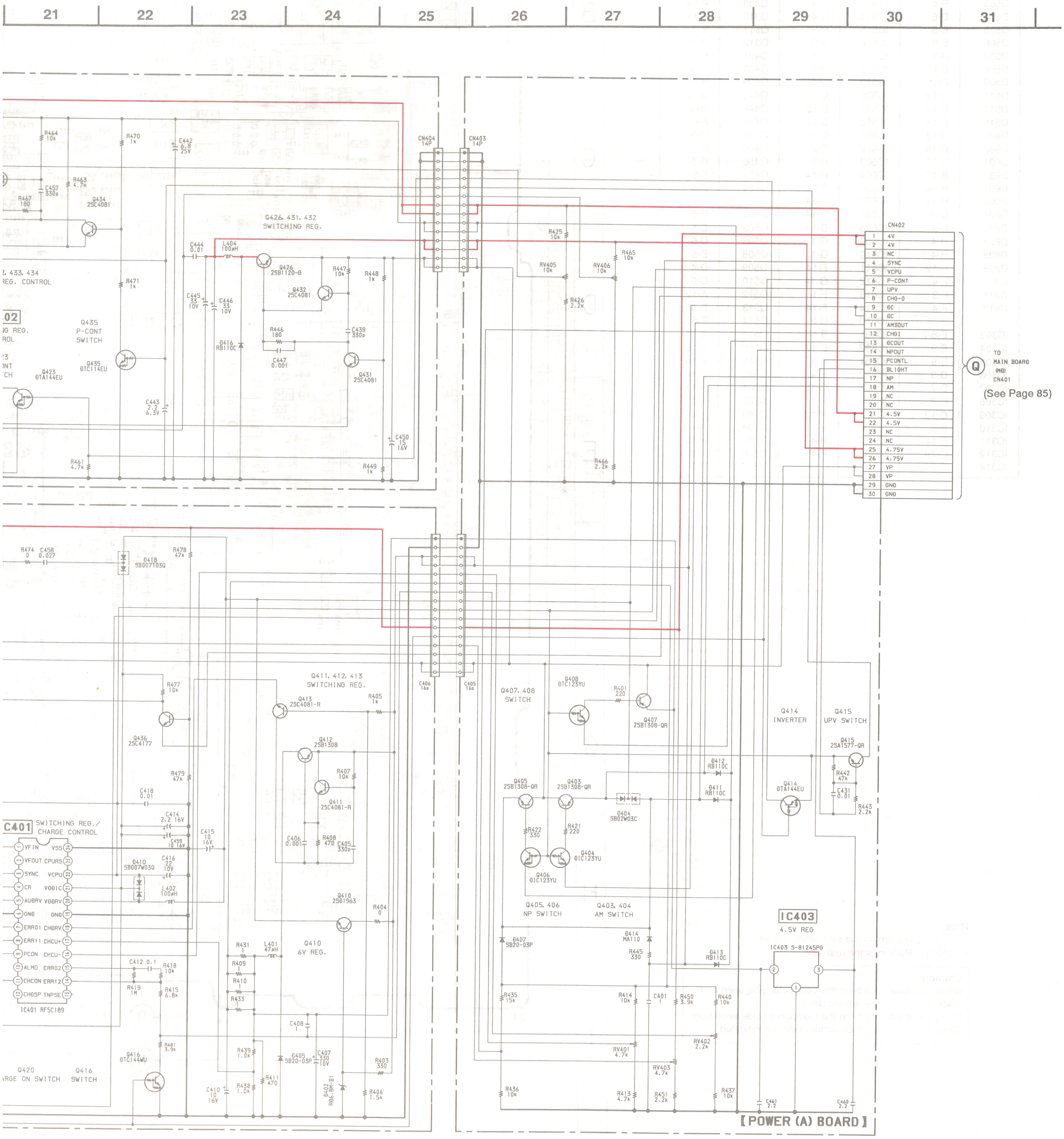
21 22 23 24 25 26 27 28 29 30 31
R464 10k
R470 1k
C442 6.8 25V
R463 4.7k
C457 330p
R467 180
Q434 2SC4081
Q426, 431, 432 SWITCHING REG.
C444 0.01
L404 100µH
Q426 2SB1120-G
R447 10k
R448 1k
Q432 2SC4081
C445 33 10V
C446 33 10V
R446 180
C439 330p
D416 RB110C
C447 0.001
Q431 2SC4081
R471 1k
Q435 P-CONT SWITCH
Q435 DTC114EU
Q423 DTA144EU
C443 2.2 6.3V
C450 15 16V
R461 4.7k
R449 1k
CN404 14P
CN403 14P
R425 10k
RV405 10k
RV406 10k
R465 10k
R426 2.2k
R466 2.2k
CN402
1 4V
2 4V
3 NC
4 SYNC
5 VCPU
6 P-CONT
7 UPV
8 CHG-O
9 DC
10 DC
11 AM3OUT
12 CHGI
13 DCOUT
14 NPOUT
15 PCONTL
16 BLIGHT
17 NP
18 AM
19 NC
20 NC
21 4.5V
22 4.5V
23 NC
24 NC
25 4.75V
26 4.75V
27 VP
28 VP
29 GND
30 GND
Q TO MAIN BOARD (M8) CN401
(See Page 85)
R474 0
C458 0.027
D418 SB007T03Q
R478 47k
Q411, 412, 413 SWITCHING REG.
R477 10k
Q413 2SC4081-R
R405 1k
Q436 2SC4177
Q412 2SB1308
R479 47k
R407 10k
Q411 2SC4081-R
C418 0.01
C414 2.2 16V
C459 10 16V
C415 10 16V
C406 0.001
R408 470
C405 330p
C401 SWITCHING REG./ CHARGE CONTROL
VFIN VSS
VFOUT CPURS
SYNC VCPU
CR VDDIC
AUDRV VDDRV
GND GND
ERR01 CHDRV
ERR11 CHCU+
PCON CHCU-
ALMO ERR02
CHCON ERR12
CHDSP TNPSE
IC401 RFSC189
D410 SB007W03Q
C416 22 10V
L402 100µH
Q410 2SB1963
R404 0
Q410 6V REG.
R431 1
L401 47µH
R409 1
R410 1
R433 1
C412 0.1
R418 10k
R419 1M
R415 6.8k
C408 1
R481 3.9k
Q416 DTC144WU
Q420 RGE ON SWITCH
Q416 SWITCH
R439 1.0k
D405 SB20-03P
C407 330 10V
R403 330
C410 10 16V
R438 1.0k
R411 470
D402 RB6.8H-B1
R406 1.5k
C406 16p
C405 16p
Q407, 408 SWITCH
Q408 DTC123YU
R401 220
Q407 2SB1308-QR
Q414 INVERTER
Q415 UPV SWITCH
Q415 2SA1577-QR
R442 47k
C431 0.01
R443 2.2k
D412 RB110C
D411 RB110C
Q414 DTA144EU
Q405 2SB1308-QR
Q403 2SB1308-QR
D404 SB02W03C
R422 330
R421 220
Q404 DTC123YU
Q406 DTC123YU
Q405, 406 NP SWITCH
Q403, 404 AM SWITCH
IC403 4.5V REG
IC403 S-81245PG
D407 SB20-03P
D414 MA110
R445 330
D413 RB110C
R435 15k
R414 10k
C401 1
R450 3.9k
R440 10k
RV401 4.7k
RV402 2.2k
RV403 4.7k
R436 10k
R413 4.7k
R451 2.2k
R437 10k
C461 2.2
C460 2.2
【POWER (A) BOARD】

4-12. PRINTED WIRING BOARDS

- MD SECTION 2 (MAIN, PTOC board)
- See page 37 for Circuit Boards Location and see page 91 for Semiconductor Lead Layouts.

• Semiconductor Location

Ref No.	Location	Ref. No.	Location	Ref. No.	Location
D301	A-14	IC315	H-12	Q101	A-3
D304	E-10	IC410	G-12	Q102	B-3
D305	E-9	IC501	B-5	Q103	B-2
D307	C-3	IC502	B-4	Q105	B-2
D310	F-10	IC503	B-11	Q201	A-13
D311	C-2	IC504	B-10	Q202	B-12
D401	H-10	IC505	A-5	Q203	A-2
D406	H-10	IC506	B-11	Q205	A-2
D420	H-11	IC507	C-5	Q301	F-10
D421	H-11	IC508	C-10	Q302	A-12
D422	I-10	IC509	E-10	Q303	C-15
D423	H-10	IC510	E-5	Q304	C-15
D424	G-3	IC511	C-12	Q306	C-3
D502	A-6	IC512	E-10	Q307	F-5
D503	E-4	IC513	D-4	Q309	F-14
D504	D-6	IC514	H-4	Q310	F-13
D505	E-5	IC515	H-3	Q311	E-9
D506	E-5	IC516	B-5	Q312	D-12
D507	H-3	IC517	C-12	Q401	H-11
D508	E-11	IC518	D-5	Q402	I-10
D509	D-11	IC519	D-4	Q409	H-10
D511	D-12	IC520	C-5	Q445	G-12
D512	D-12	IC521	E-12	Q446	G-5
D515	D-11	IC522	B-17	Q447	F-5
D601	D-13	IC601	E-14	Q448	G-5
D602	D-14	IC602	E-2	Q449	F-5
D691	B-17	IC603	H-2	Q450	G-5
D692	B-17	IC604	H-14	Q451	F-5
D693	B-18	IC605	D-2	Q452	G-5
D803	H-11	IC606	E-14	Q501	B-6
D804	D-4	IC607	D-14	Q502	B-6
D806	F-3	IC608	D-14	Q503	C-5
D807	H-4	IC609	G-1	Q506	D-6
D808	H-4	IC610	G-1	Q508	E-5
D809	H-12	IC611	F-14	Q509	D-4
D810	F-4	IC612	G-14	Q510	C-6
D811	F-3	IC613	F-1	Q512	A-12
D812	F-4	IC614	F-14	Q513	E-5
		IC615	G-2	Q514	E-5
IC303	E-6	IC691	B-17	Q516	D-11
IC304	E-9	IC692	B-17	Q518	D-10
IC305	E-9	IC801	E-3	Q519	E-10
IC306	D-9	IC802	E-4	Q520	D-10
IC307	D-7	IC803	G-12	Q801	H-11
IC308	D-9	IC804	H-11	Q802	H-11
IC309	C-13	IC805	H-12	Q803	H-4
IC310	B-3	IC806	H-11	Q804	H-4
IC311	B-14	IC807	H-4	Q805	H-12
IC312	C-14	IC808	F-4	Q806	H-12
IC314	C-2			Q807	D-3

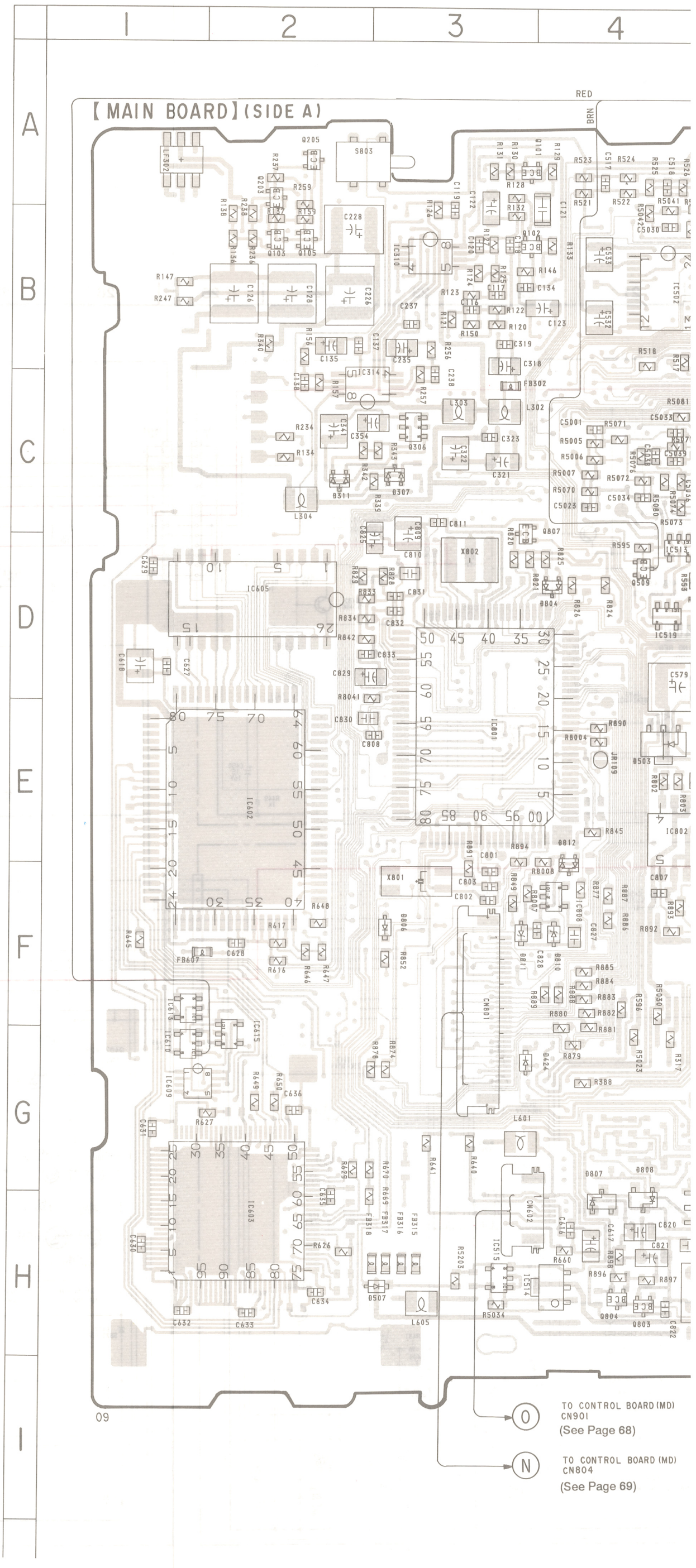

Note:

- : Pattern on the side which is seen.
- : Pattern of the rear side.

Caution:
Conductor side (Side B): Parts on the Conductor side seen from the are indicated.
Component side (Side A): Parts on the Component side seen from the Component side are indicated.

5 | 6 | 7 | 8 | 9 | 10 | 11

【MAIN BOARD】(SIDE B)

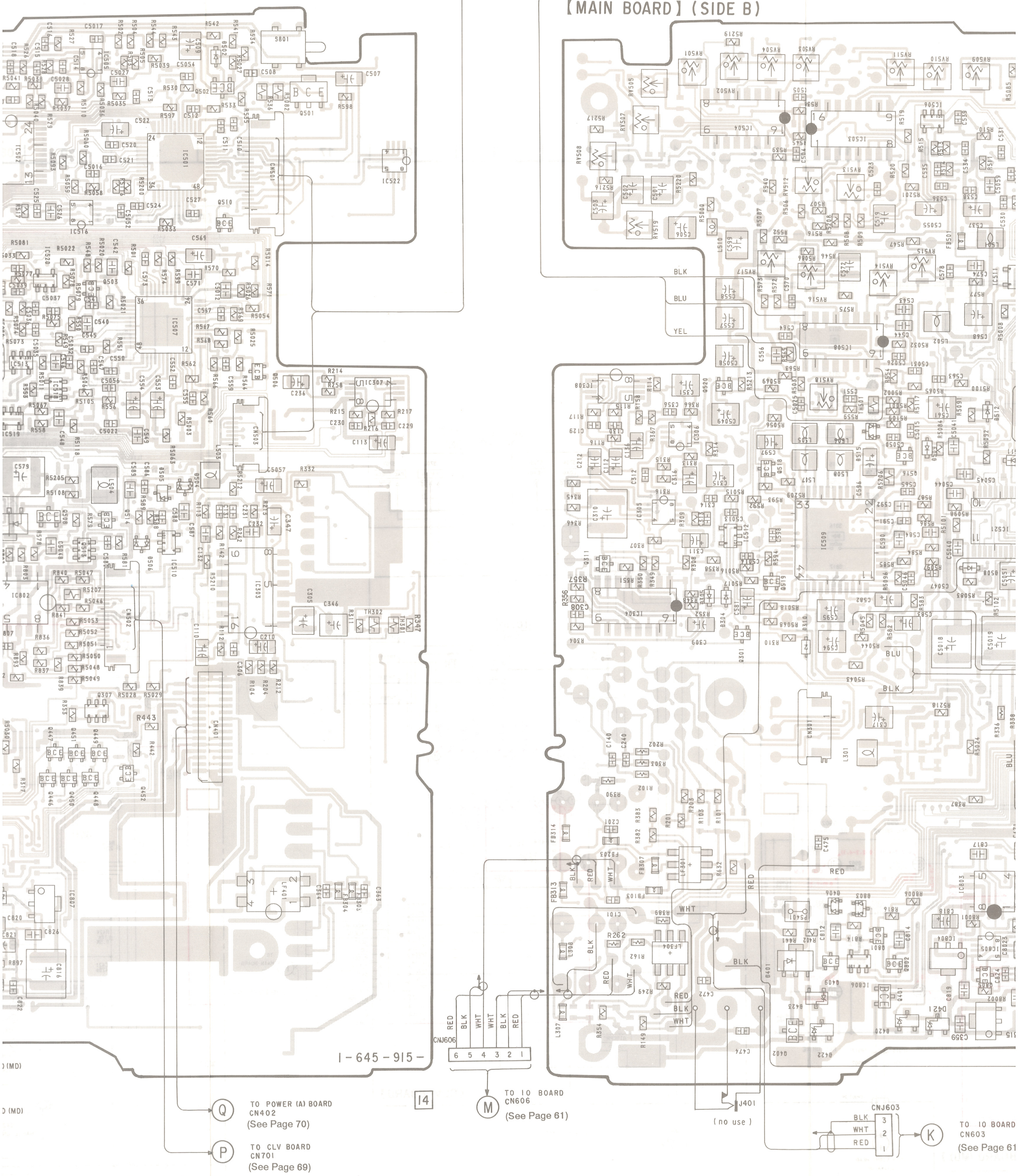

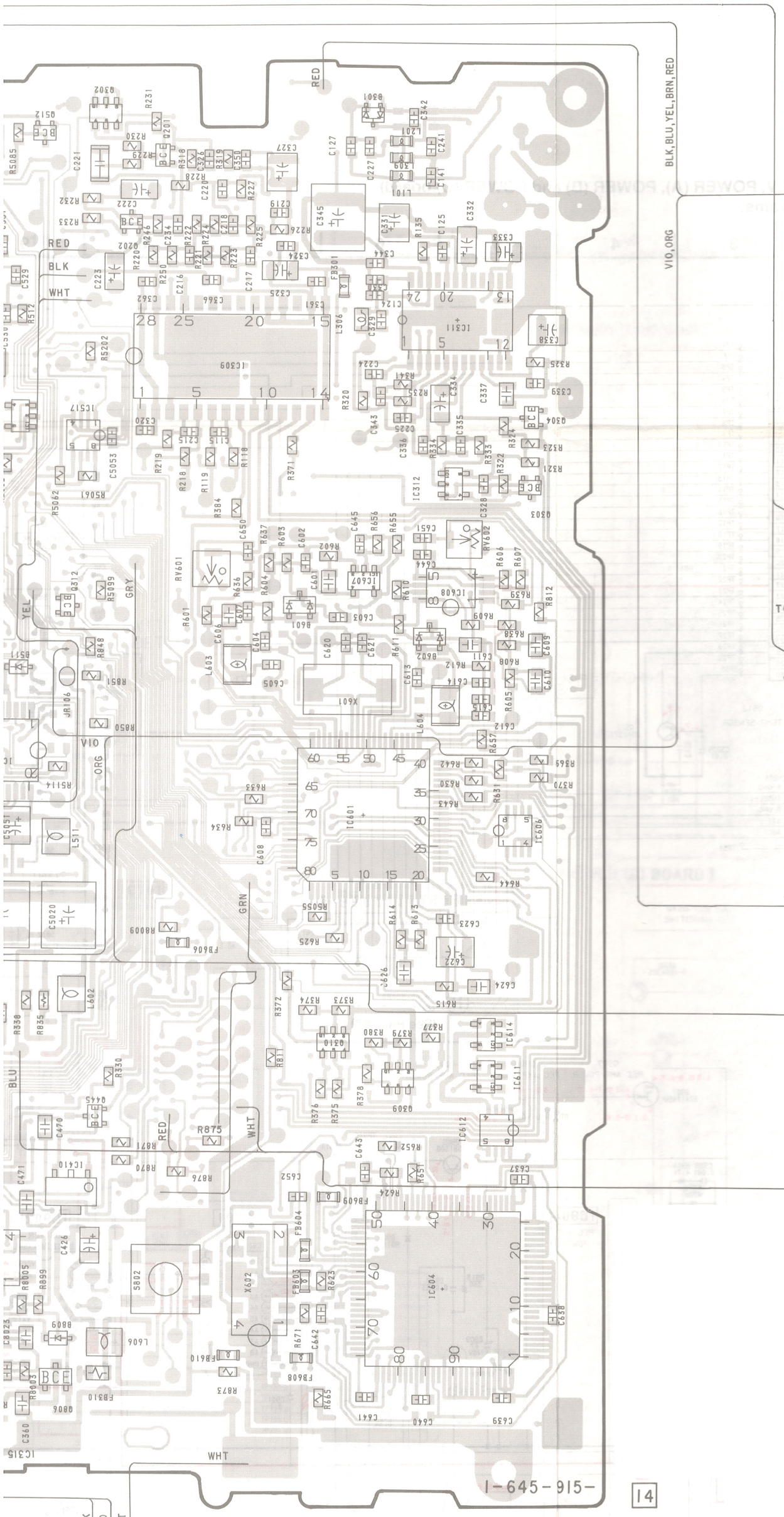
RED
BLK
WHT
VIO
ORG
YEL
GRY
GRN
BLU
RED
WHT
BLK, BLU, YEL, BRN, RED
VIO, ORG
I-645-915-
14

【PTOC BOARD】

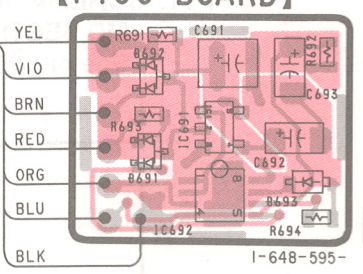
YEL
VIO
BRN
RED
ORG
BLU
BLK
12
I-648-595-

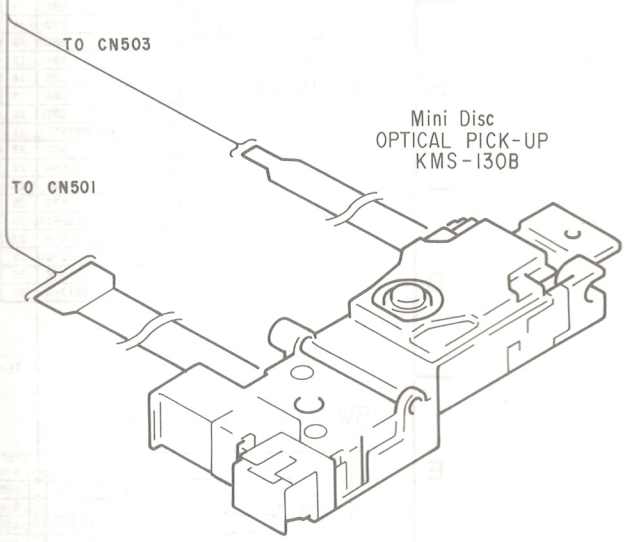
TO CN503
TO CN501
Mini Disc
OPTICAL PICK-UP
KMS-130B

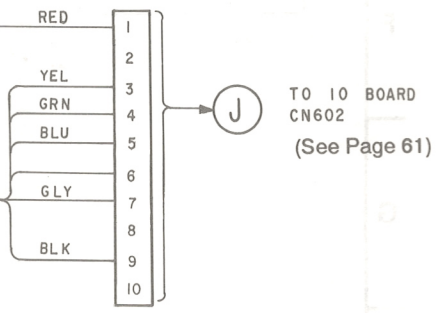
RED
YEL
GRN
BLU
GLY
BLK
1
2
3
4
5
6
7
8
9
10
J
TO IO BOARD
CN602
(See Page 61)

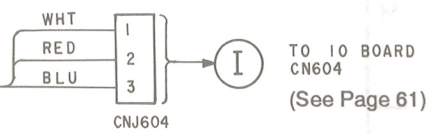
WHT
RED
BLU
1
2
3
CNJ604
I
TO IO BOARD
CN604
(See Page 61)

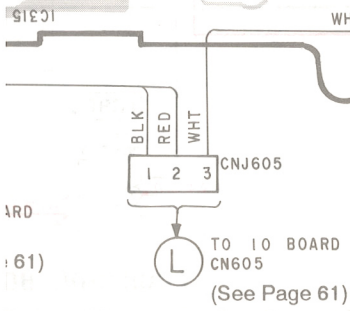
BLK
RED
WHT
1 2 3
CNJ605
L
TO IO BOARD
CN605
(See Page 61)

4-13. SCHEMATIC DIAGRAM

- MD SECTION 2 (MAIN (1/2) board)
- See page 94 for IC Block Diagrams.

(See Page 88)

TO MAIN BOARD (MD) (2/2) ⑫

(See Page 89)

TO MAIN BOARD (MD) (2/2) ⑥

IC603 ATRAC L-CH
IC603 CX02527R-1

IC609 ATRAC R-CH IC609 TC7W74FU
IC610 ATRAC R-CH IC610 TC7S08F
IC611 ATRAC R-CH IC611 TC7S04F
IC612 ATRAC R-CH IC612 TC7W74FU
IC613 ATRAC R-CH IC613 SC7S32FER
IC614 ATRAC R-CH IC614 SC7S08FER
IC615 ATRAC R-CH IC615 SC7S32FER

IC606 PIT/GROOVE SW — IC606 TC4W53FU

IC607 DIGITAL IN PLL — IC607 NJM2107F

IC608 ENCODER PLL — IC608 (2/2) NJM2100V — IC608 (1/2) NJM2100V

IC601 EFM ENCODE/DECODE
IC601 CX02525R

IC602 SHOCK PROOF , MEMORY CON
IC602 CX02526Q

(See Page 90)

TO MAIN BOARD (MD) (2/2) ①

IC604 ATRAC R-CH

IC604 CX82527R

IC602 LOCK PROOF , MEMORY CONTROLLLER

IC602 CX82526Q

IC605 4M DRAM

IC605 CXK4144ODTM

IC512 CLV AMP

IC512 NJM2107F

IC509 CLV DRIVER

IC509 MPC1718FU

IC515 WAVE SHAPER

IC514 S-80745AN

IC515 TC7S08F

IC514 VOL DET.

IC510 CHERGE POMP

IC510 TC7S04F

IC801 SYSTEM CONTROL

IC801 CXP81740-602Q

IC808 CHARGE POMP

IC808 TC7S04F

Q514 10V SW

Q514 2SA1577-QR

Q508 10V DRIVE

Q508 2SD1328-RST

Q513 XN4601

Q513 PRE DRIVE

Q807 PULL-UP SW

Q807 DTA144EU

(See Page 87) TO MAIN BOARD (MD) (2/2) ⑤

(See Page 88) TO MAIN BOARD (MD) (2/2) ④ (See Page 90)

TO MAIN BOARD (MD) (2/2) ⑦

TO MAIN BOARD (MD) (2/2) ③ (See Page 86)

TO MAIN BOARD (MD) (2/2) ⑧

(See Page 9

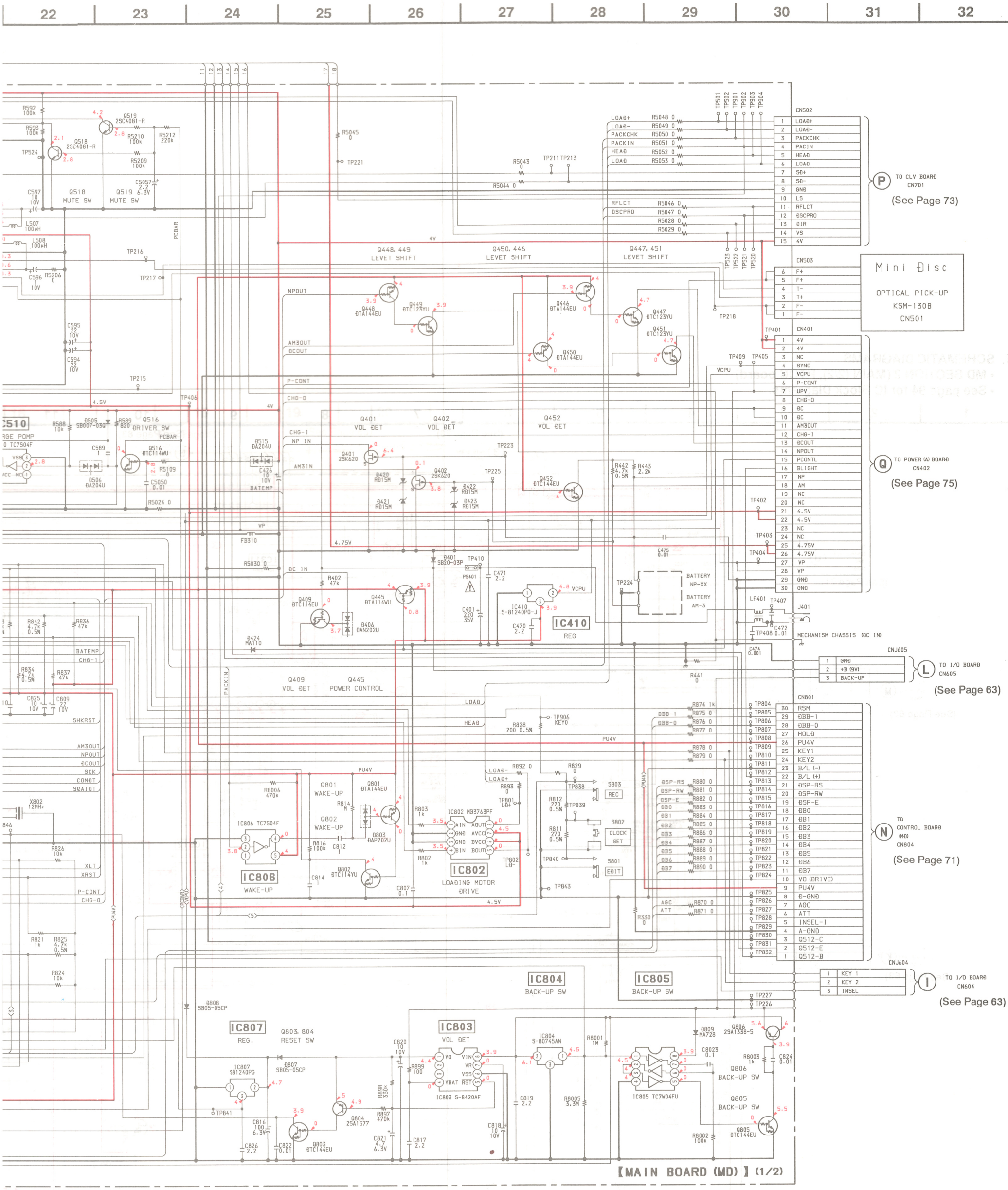

Note:

- All capacitors are in µF unless otherwise noted. pF:µµF 50WV or less are not indicated except for electrolytics and tantalums.
- All resistors are in Ω and 1/4W or less unless otherwise specified.
- % : indicates tolerance.
- ▬ : B+ Line
- ▭ : adjustment for repair.
- Voltages are taken with a VOM (Input impedance 10Ω). Voltage variations may be noted due to normal production tolerances.
  no mark : FM
  ( ) : REC
- Signal path.
  ▷ : PB (ANALOG OUT) ▷» : PB (DIGITAL OUT)
  ▨▷ : REC (ANALOG IN) ▨▷» : REC (DIGITAL IN)

4-14. SCHEMATIC DIAGRAMS

- MD SECTION 2 (MAIN (2/2), PTOC board)
- See page 94 for IC Block Diagrams.

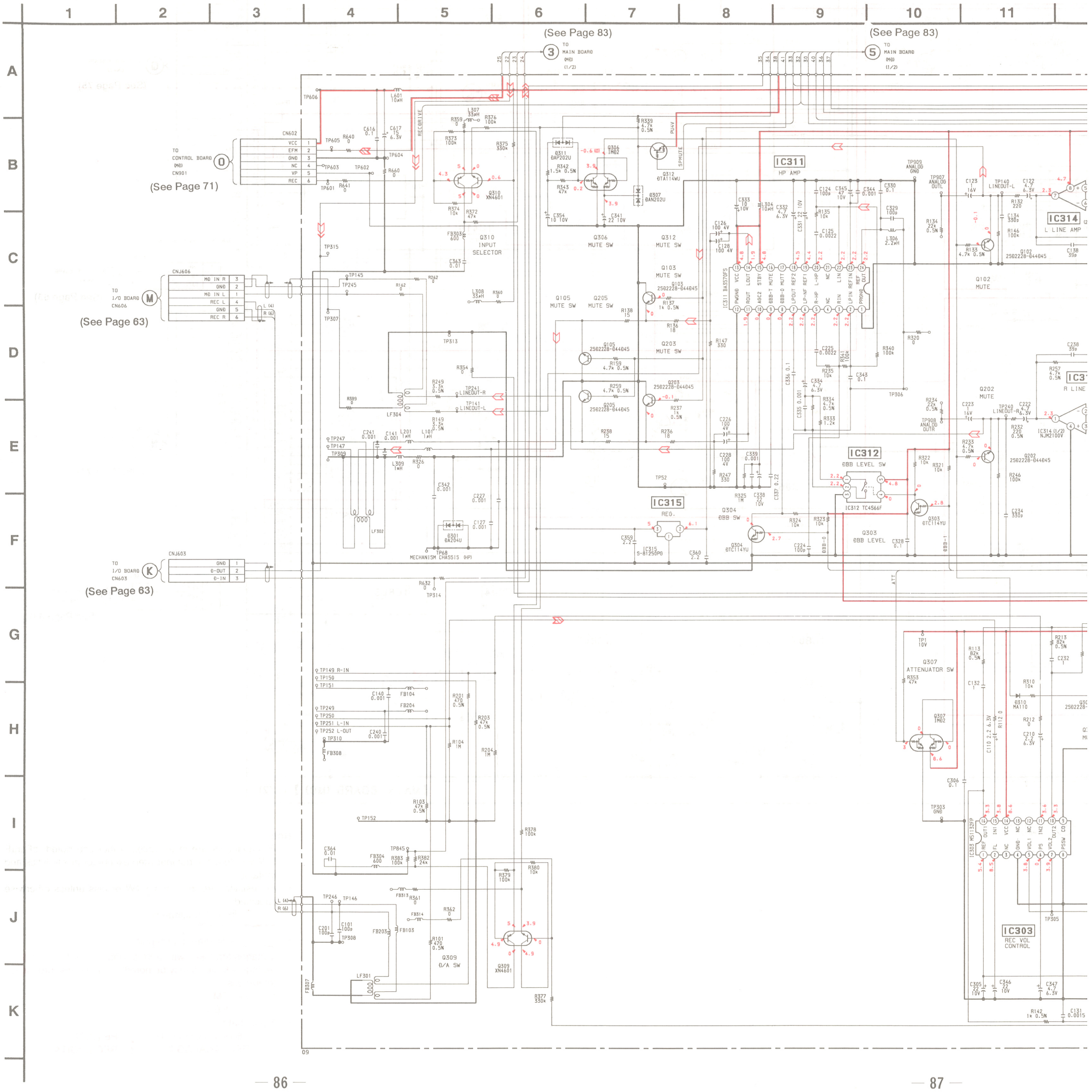

(See Page 82)

(See Page 83)

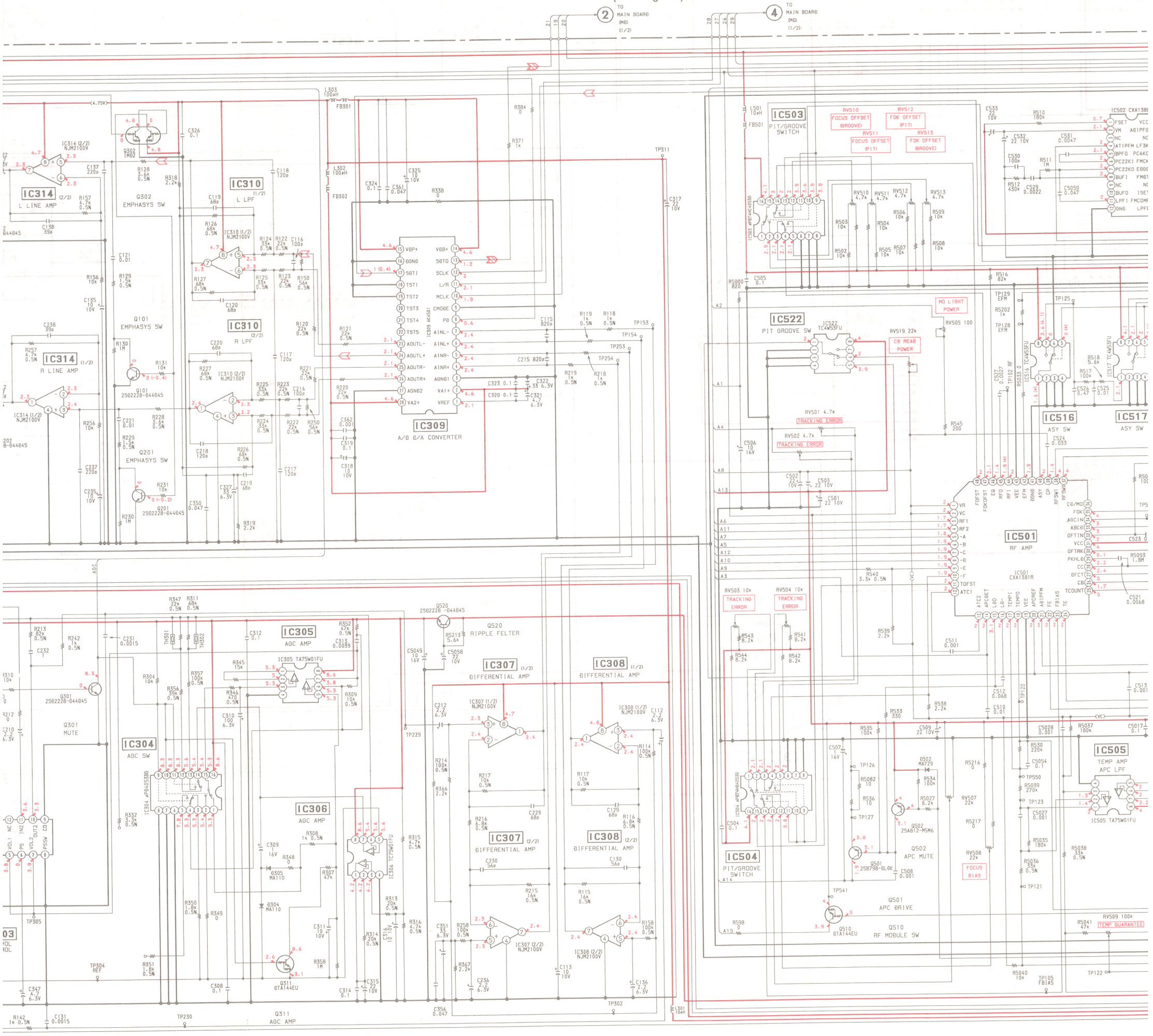

Note:

- All capacitors are in μF unless otherwise noted. pF:μμF 50WV or less are not indicated except for electrolytics and tantalums.
- All resistors are in Ω and 1/4W or less unless otherwise specified.
- % : indicates tolerance.
- ▬▬ : B+ Line
- ▭ : adjustment for repair.
- Voltages are taken with a VOM (Input impedance 10Ω). Voltage variations may be noted due to normal production tolerances.
  no mark : PB
  ( ) : REC
- Signal path.
  ▷ : PB (ANALOG OUT) ▷» : PB (DIGITAL OUT)
  ▷ : REC (ANALOG IN) ▷» : REC (DIGITAL IN)

21 | 22 | 23 | 24 | 25 | 26 | 27 | 28 | 29 | 30 | 31 | 32

(See Page 81)

IC502 CXA1380N AD1P DECODE
IC508 PIT/GROOVE SWITCH
IC518 FOCUS DRIVE AMP
IC520 CLV LPF
IC511 CLV LPF
IC506 DEFECT INHIBIT SW
IC516 ASY SW
IC517 ASY SW
IC501 RF AMP
IC501 CXA1381R
IC505 TA75W01FU TEMP AMP APC LPF
IC507 CXA1602R SERVO
IC513 LOCK SW
IC521 REC ANTI SHOCK
IC519 LOW BOOST SWITCH
Q509 SWITCH
Q503 CLV MUTE
Q506 SLED MUTE
Q512 BUFFER
TRACKING GAIN (MD)
TRACKING GAIN (CD)
FOCUS GAIN (CD)
FOCUS GAIN (MD)
FOCUS BIAS
TEMP GUARANTEE
MD LIGHT POWER
CN501
TO MAIN BOARD (MD) (1/2)

【MAIN BOARD (MD)】(2/2)

Note:

- All capacitors are in µF unless otherwise noted. pF:µµF 50WV or less are not indicated except for electrolytics and tantalums.
- All resistors are in Ω and 1/4W or less unless otherwise specified.
- % : indicates tolerance.
- ▬▬ : B+ Line
- ▭ : adjustment for repair.
- Voltages are taken with a VOM (Input impedance 10Ω). Voltage variations may be noted due to normal production tolerances.
  no mark : PB
  ( ) : REC
- Signal path.
  ▷ : PB (ANALOG OUT) ▷» : PB (DIGITAL OUT)
  ▷ : REC (ANALOG IN) ▷» : REC (DIGITAL IN)

(See Page 81)

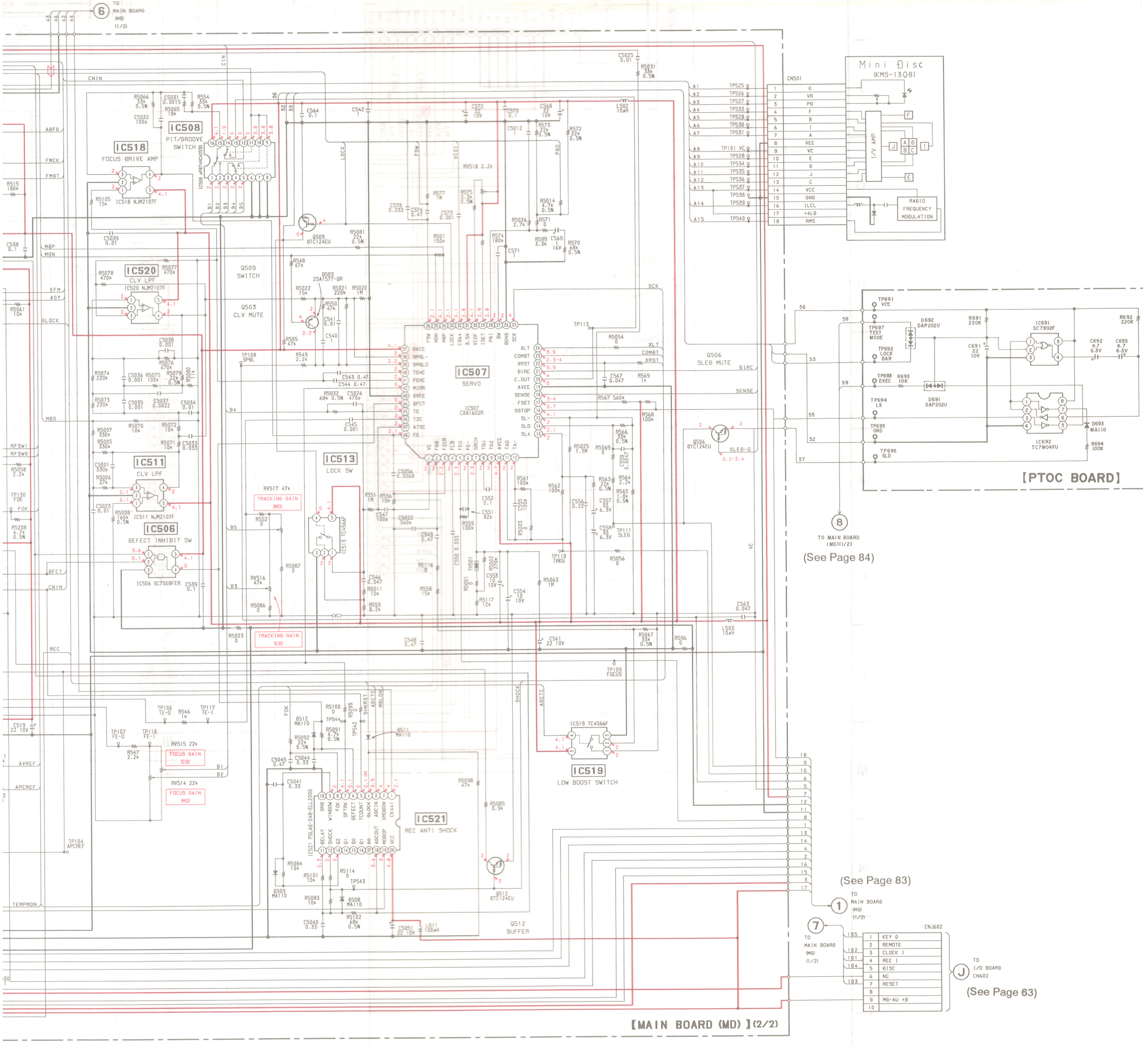

4-15. SEMICONDUCTOR LEAD LAYOUTS

BA3924-V3

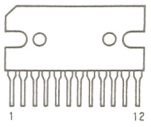

BA6208

(Marking side view)

CD4052BCM

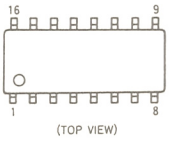

(TOP VIEW)

CD4066BCM
TC74HC03AF-TP1

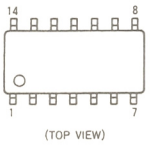

(TOP VIEW)

CXA1381R

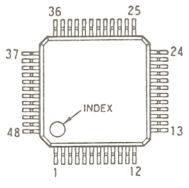

(TOP VIEW)

CXD2525R

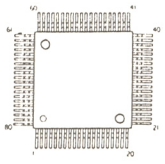

CXD2526Q
CX84120-CFDX100
CXP84120-010Q

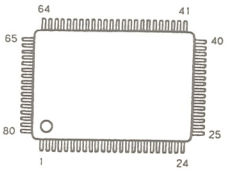

CXD2527R

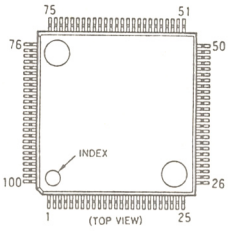

CXD2527R-1

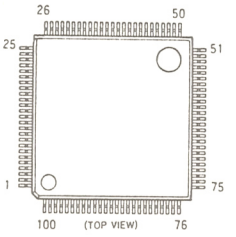

CXP81740-603Q

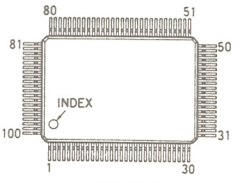

(TOP VIEW)

LA1831

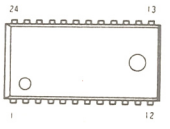

LC7216M
MC13020-MR

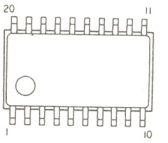

M5216FP
M5218AFP
NJM2100D
NJM2100M

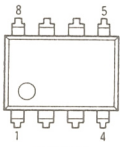

(TOP VIEW)

RF5C62

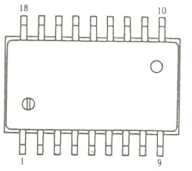

MARKING SIDE VIEW

S-80730AN

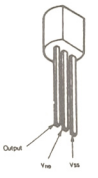

S-81250HG

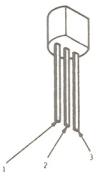

TA8176SN

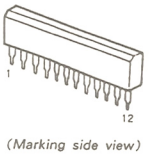

(Marking side view)

TC7WU04F

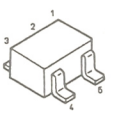

2SA1175
2SC2785
DTA114YS

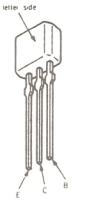

2SB1370

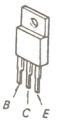

2SC4048

2SK679A

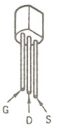

DTA114YK
DTC114YK
DTC114YU
DTC343TK

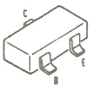

UN2216
UN221E

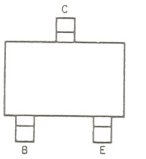

1SS226

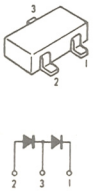

EC10QS-10

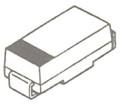

MA8068

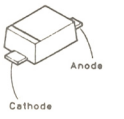

RBV-602-01

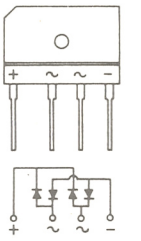

SVC342L-V

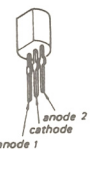

4-16. IC BLOCK DIAGRAMS

—MAIN SECTION —

• RADIO BOARD IC1 TA2012N

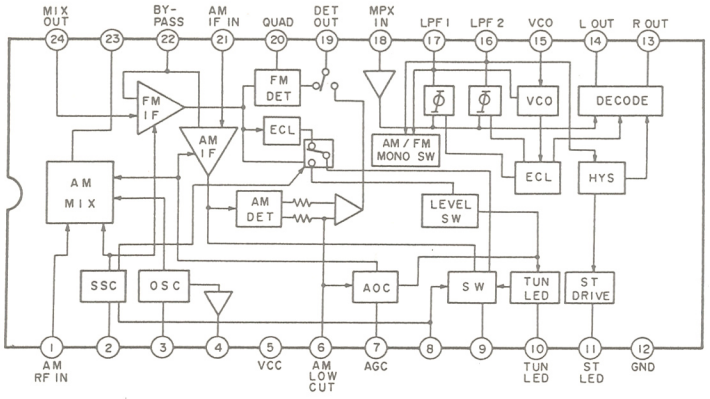

• RADIO BOARD IC2 LC7216M-TP-T1

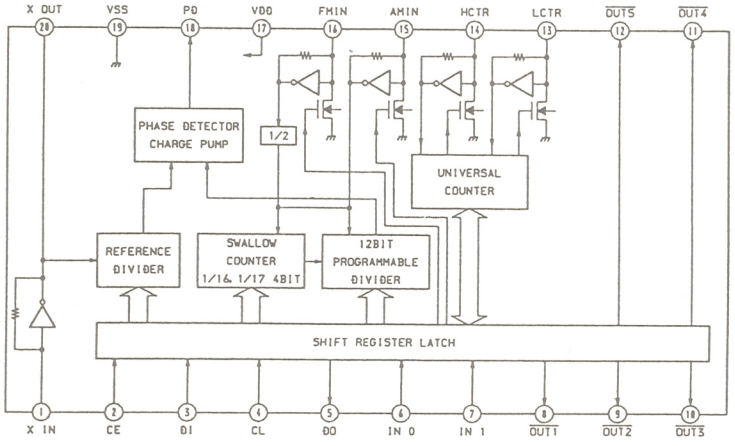

• RADIO BOARD IC3 TA8176SN

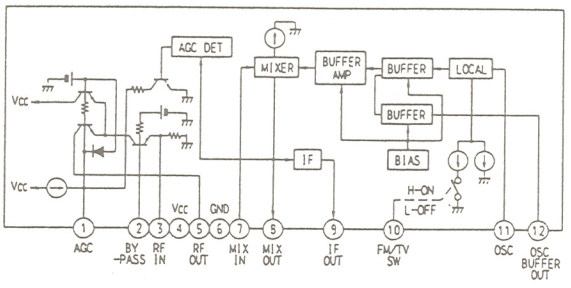

• MAIN BOARD IC101, 201 uPC2501H-1

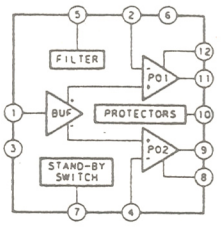

• MAIN BOARD IC301 CD4052BCM

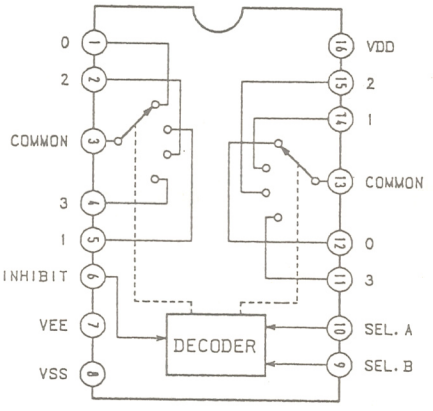

• VOL BOARD IC401 BA6208

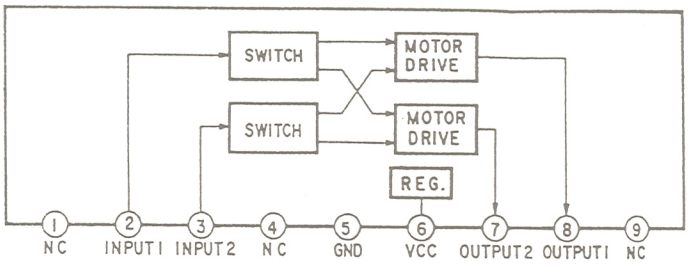

• CONTROL BOARD IC501 GP1U58XB

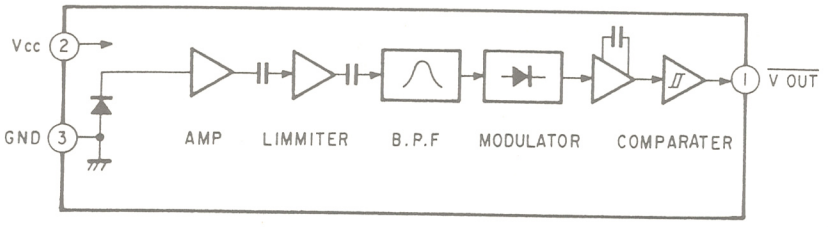

• MAIN BOARD IC802 S-80730AL-Z

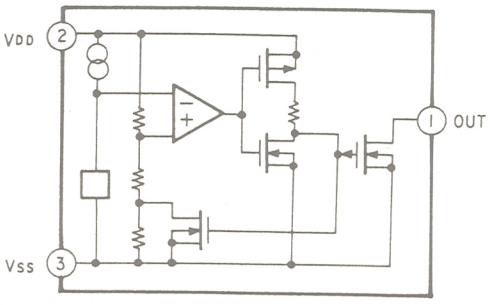

• MAIN BOARD IC901 BA3924-V3

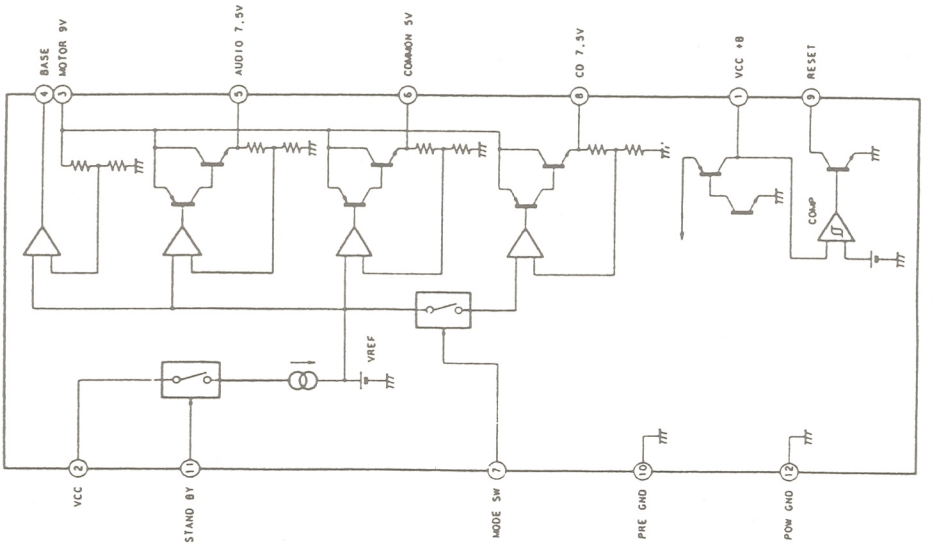

• MAIN BOARD IC902, 903 S-81250HG

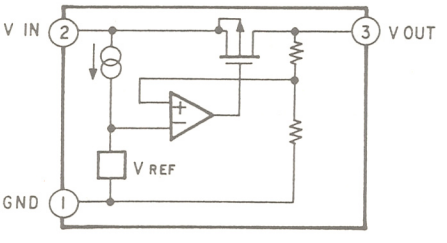

— MD BLOCK —

• MAIN BOARD IC501 CXA1381R

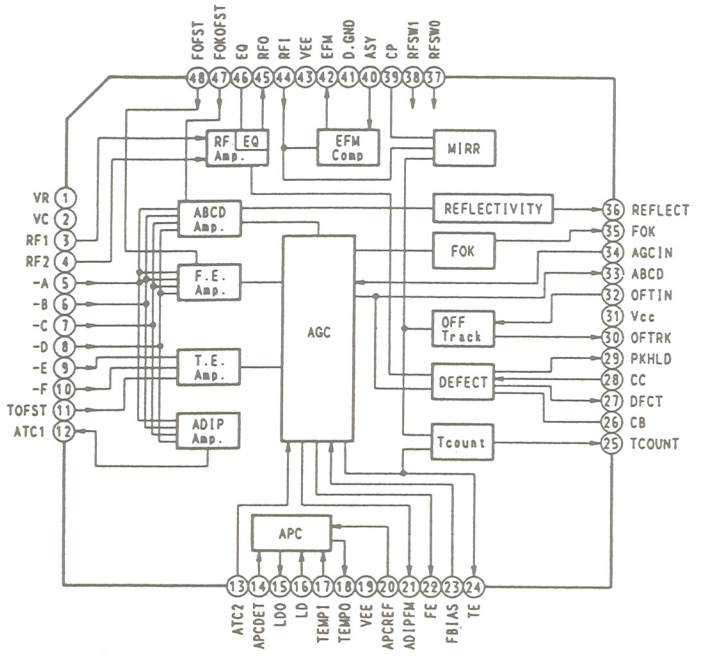

• MAIN BOARD IC502 CXA1380M

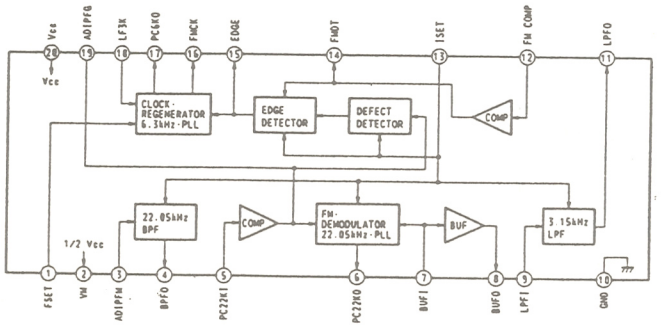

• CONTROL BOARD IC901 74ACT540

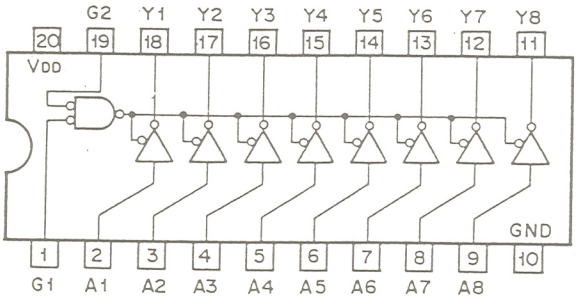

• MAIN BOARD IC603 CXD2527R-1

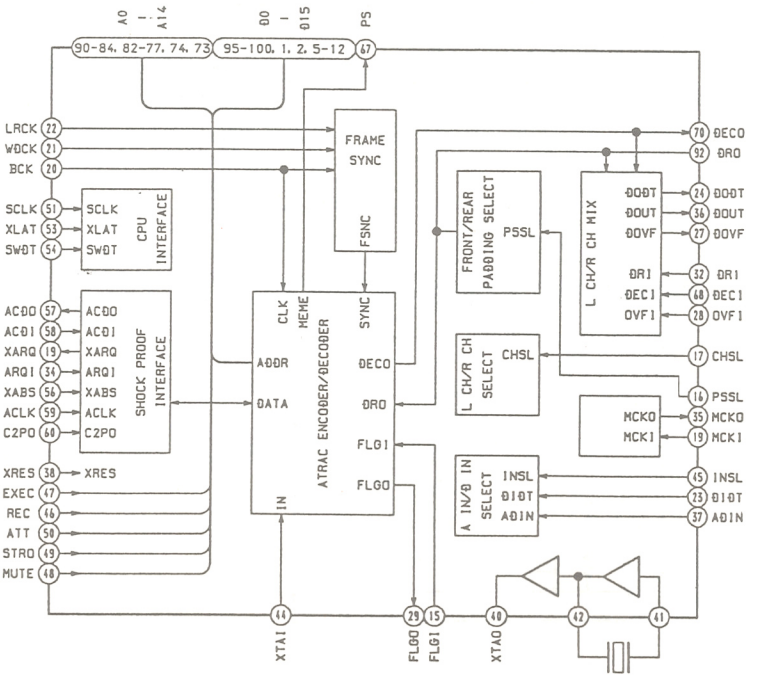

• MAIN BOARD IC604 CXD2527R

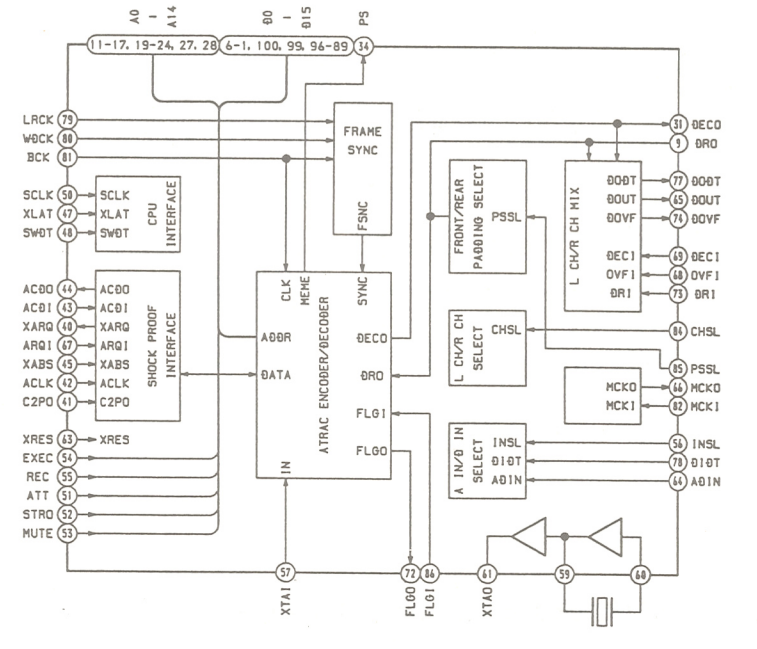

• CONTROL BOARD IC902 74ACT541

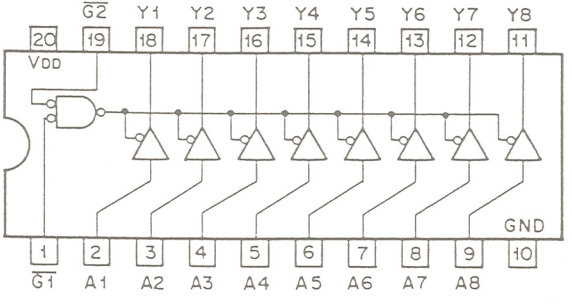

SECTION 5
EXPLODED VIEWS

NOTE:
- -XX, -X mean standardized parts, so they may have some difference from the original one.
- Color Indication of Appearance Parts Example:
  KNOB, BALANCE (WHITE) . . . (RED)
  ↑ Parts color ↑ Cabinet's color
- G: German model
- IT: Italian model
- Items marked " * " are not stocked since they are seldom required for routine service. Some delay should be anticipated when ordering these items.
- The mechanical parts with no reference number in the exploded views are not supplied.
- Hardware (# mark) list is given in the last of this parts list.

The components identified by mark ⚠ or dotted line with mark ⚠ are critical for safety.
Replace only with part number specified.

Les composants identifiés par une marque ⚠ sont critiques pour la sécurité.
Ne les remplacer que par une piéce portant le numéro spécifié.

5-1. FRONT CABINET ASSEMBLY

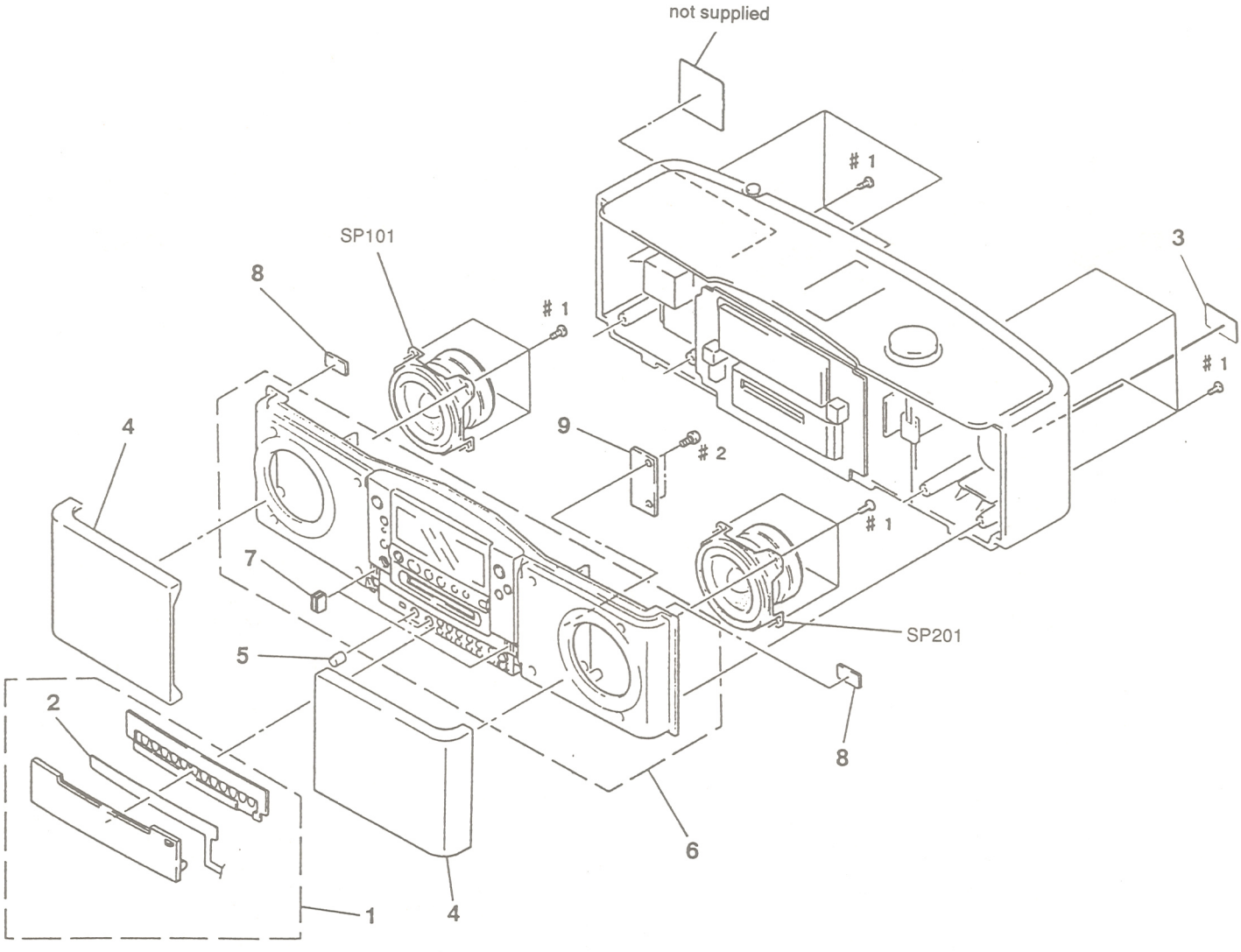

Ref. No.	Part No.	Description	Remark
1	A-3263-773-A	LID ASSY, CONTROL	
2	1-466-988-11	SWITCH UNIT	
* 3	3-383-181-01	LABEL (POWER)	
4	X-3366-289-1	FRAME ASSY, SPEAKER	
5	3-385-984-01	KNOB (BASS TREBLE)	
6	X-3366-907-1	CABINET ASSY, FRONT (AEP, UK, G, IT)	
6	X-3367-192-1	CABINET ASSY, FRONT (US, Canadian)	
7	1-452-419-21	MAGNET	
8	3-831-441-XX	CUSHION, SPEAKER	
* 9	1-647-781-21	RELAY BOARD	
SP101	1-504-415-11	SPEAKER (L-CH) (AEP, UK, G, IT)	
SP101	1-544-653-11	SPEAKER (8CM) (L-CH) (US, Canadian)	
SP201	1-504-415-11	SPEAKER (R-CH) (AEP, UK, G, IT)	
SP201	1-544-653-11	SPEAKER (8CM) (R-CH) (US, Canadian)	

5-2. REAR CABINET ASSEMBLY

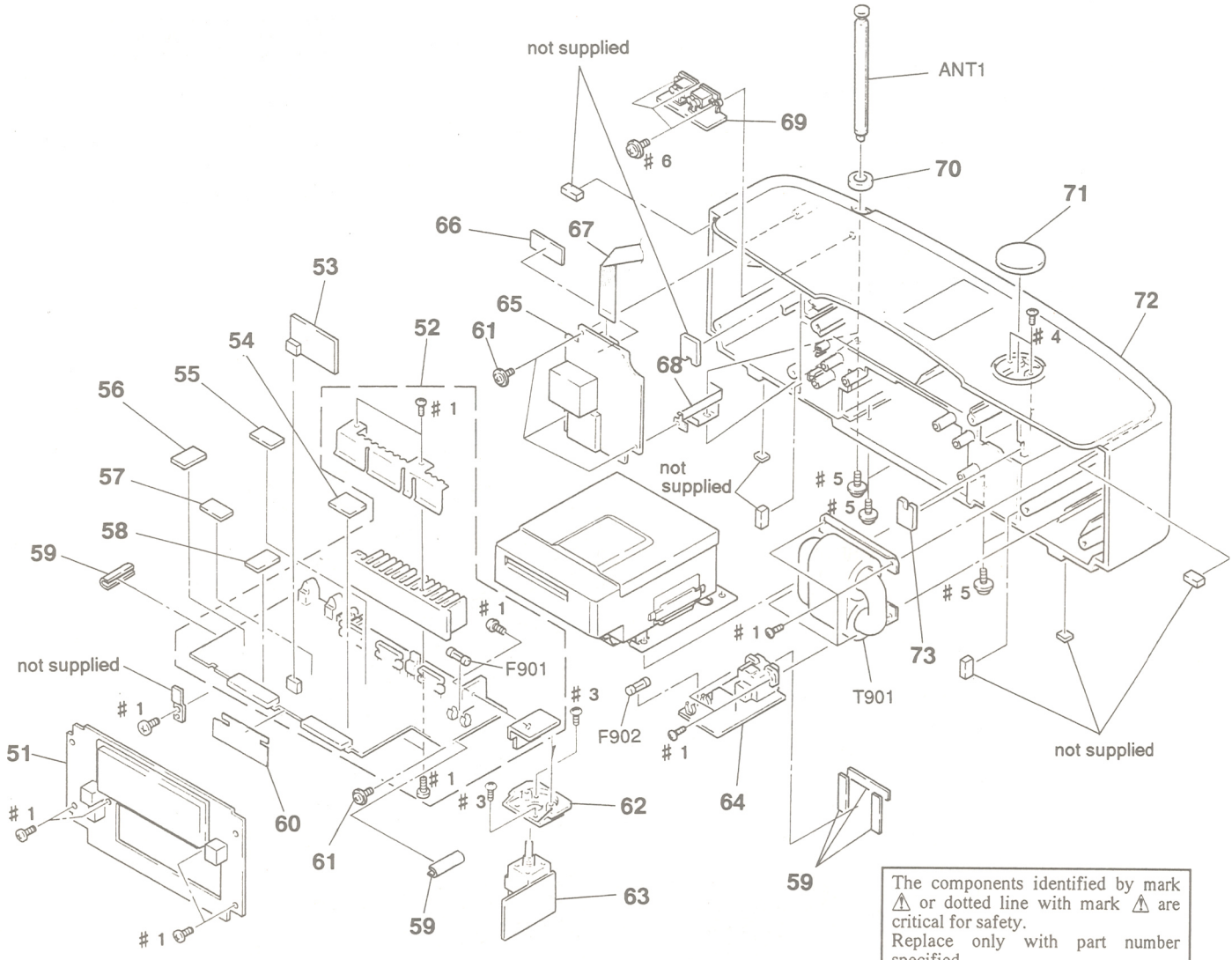

The components identified by mark ⚠ or dotted line with mark ⚠ are critical for safety.
Replace only with part number specified.

Les composants identifiés par une marque ⚠ sont critiques pour la sécurité.
Ne les remplacer que par une piéce portant le numéro spécifié.

Ref. No.	Part No.	Description	Remark
* 51	A-3264-587-A	CONTROL BOARD, COMPLETE (AEP, UK, G, IT)	
* 51	A-3264-623-A	CONTROL BOARD, COMPLETE (US, Canadian)	
* 52	A-3264-584-A	MAIN BOARD, COMPLETE (AEP, G)	
* 52	A-3264-618-A	MAIN BOARD, COMPLETE (US, Canadian)	
* 52	A-3264-619-A	MAIN BOARD, COMPLETE (UK)	
* 52	A-3264-621-A	MAIN BOARD, COMPLETE (IT)	
* 53	A-3264-585-A	DECODER BOARD, COMPLETE	
* 54	1-648-325-11	POWER SW BOARD	
* 55	1-648-204-11	AUDIO SWITCH-2 BOARD	
* 56	1-648-204-11	AUDIO SWITCH-1 BOARD	
* 57	1-648-326-11	DIGITAL IN BOARD	
* 58	1-648-327-11	MD POWER BOARD	
59	3-831-441-XX	CUSHION, SPEAKER	
* 60	3-388-953-01	SHEET (FFC), INSULATING	
* 61	4-917-583-21	BRACKET, YOKE	
* 62	3-375-850-01	COVER, VOL	
* 63	1-649-640-11	VOLUME BOARD	
* 64	1-649-096-11	INLET BOARD (US, Canadian)	
* 64	1-649-639-11	INLET BOARD (AEP, UK, G, IT)	

Ref. No.	Part No.	Description	Remark
* 65	A-3264-583-A	RADIO BOARD, COMPLETE (AEP, UK, G, IT)	
* 65	A-3264-785-A	RADIO BOARD, COMPLETE (US, Canadian)	
* 66	1-647-788-21	ANTENNA TERMINAL BOARD	
67	1-751-129-11	WIRE, PARALLEL (FFC) (17 CORE)	
* 68	3-377-918-01	TERMINAL BOARD, ANTENNA	
* 69	1-647-915-21	LOOP ANTENNA BOARD	
70	3-375-853-01	PACKING, ANTENNA	
71	4-938-309-21	KNOB (VOL)	
72	X-3366-906-1	CABINET ASSY, REAR (AEP, UK, G, IT)	
72	X-3367-208-1	CABINET ASSY, REAR (US, Canadian)	
* 73	3-375-852-01	PACKING, LEAD	
ANT1	1-501-530-11	ANTENNA, TELESCOPIC	
⚠F901	1-576-193-11	FUSE (6.3A) (US, Canadian)	
⚠F901	1-532-506-51	FUSE (T6.3A) (AEP, UK, G, IT)	
⚠F902	1-576-104-11	FUSE (2A) (US, Canadian)	
⚠T901	1-423-772-11	TRANSFORMER, POWER (US, Canadian)	
⚠T901	1-697-020-11	TRANSFORMER, POWER (UK)	
⚠T901	1-697-021-11	TRANSFORMER, POWER (AEP, G, IT)	

5-3. MD BLOCK ASSEMBLY

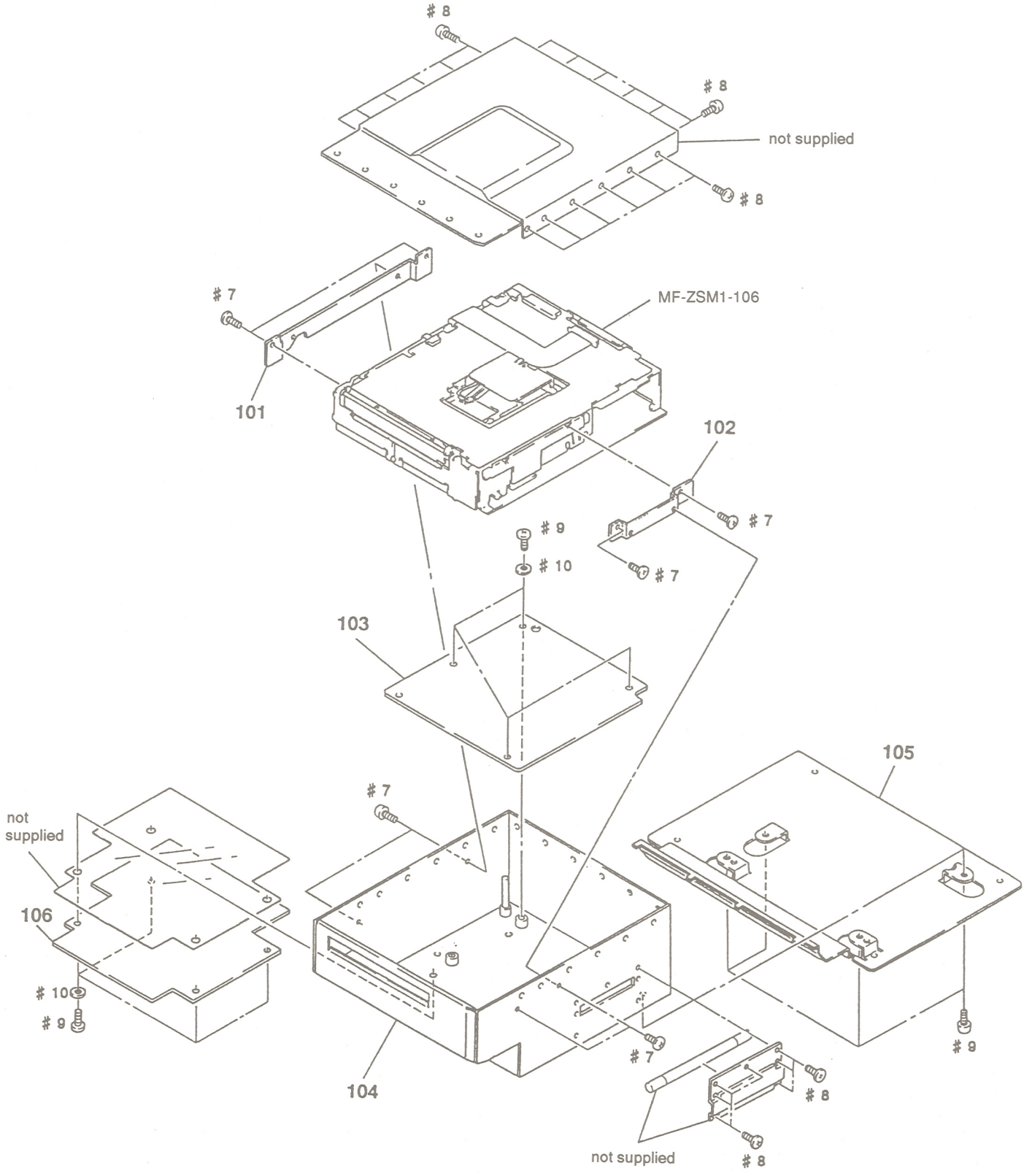

Ref. No.	Part No.	Description	Remark
* 101	3-385-985-01	HOLDER (L), MD	
* 102	3-385-986-01	HOLDER (R), MD	
* 103	A-3264-200-A	I O BOARD, COMPLETE	
* 104	X-3366-119-1	CASE ASSY, SHIELD	
* 105	3-386-016-01	BRACKET	
* 106	A-3264-581-A	FILTER BOARD, COMPLETE	

5-4. MECHANISM CHASSIS ASSEMBLY (MF-ZSM1-106)

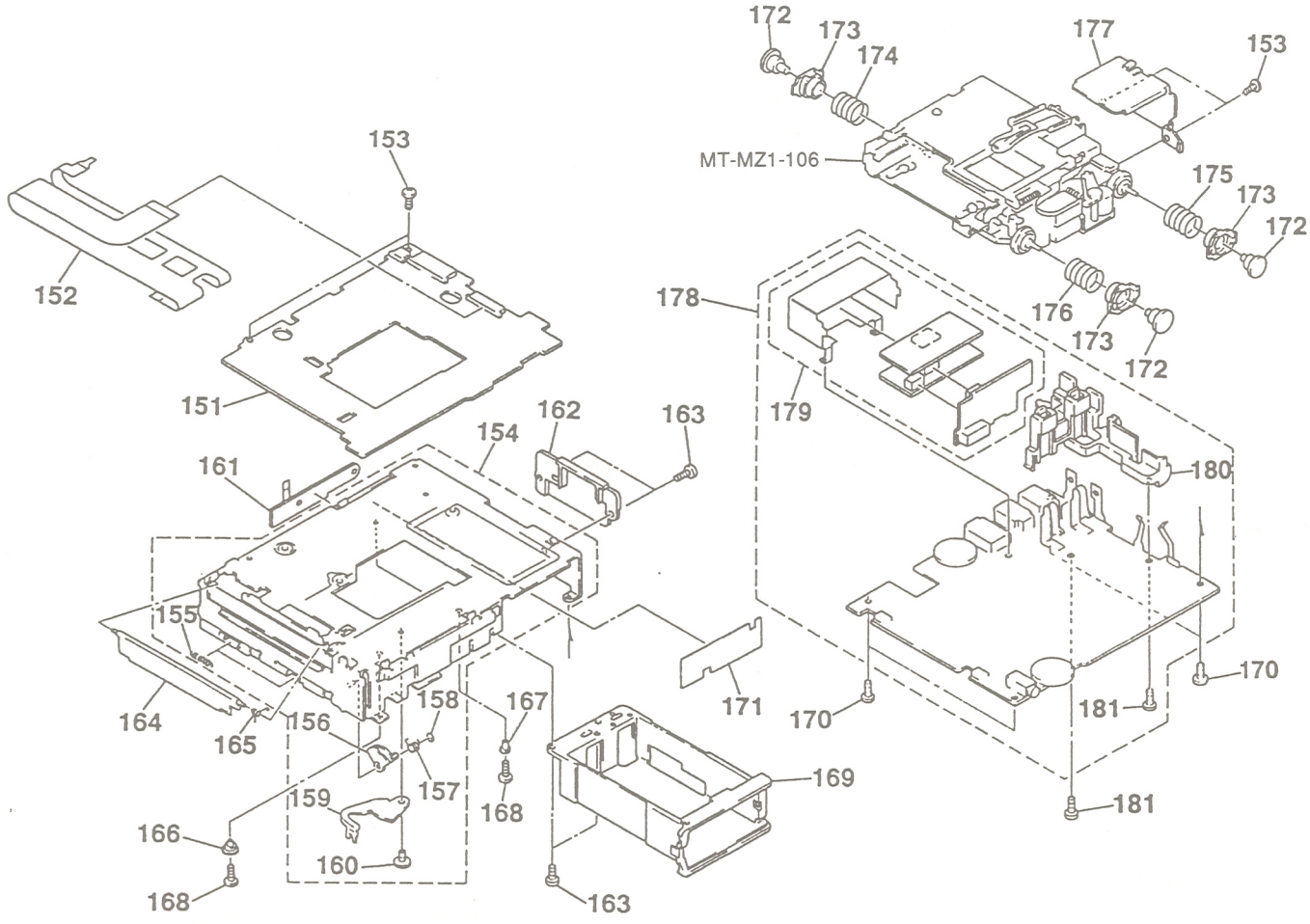

Ref. No.	Part No.	Description	Remark
* 151	A-3275-715-A	CONTROL BOARD, COMPLETE (MD)	
152	1-645-919-11	RELAY (A) FLEXIBLE BOARD	
153	4-955-841-01	SCREW	
154	X-4943-980-2	CHASSIS ASSY, SUB	
155	4-955-450-01	SPRING, TENSION	
156	4-955-526-01	LEVER (SHUTTER)	
157	4-955-528-01	SPRING (SHUTTER RD), TORSION	
158	3-348-953-11	WASHER	
159	4-955-542-01	LEVER (S OPEN)	
160	4-955-544-01	SCREW (M1.7), STEP	
161	1-466-923-11	SWITCH UNIT (MIC)	
162	4-955-541-01	REINFORCEMENT (B)	
163	3-704-244-34	SCREW (P1.7X2.5)	
164	4-955-515-01	SHUTTER (EJECT)	
165	4-955-527-01	SPRING (SHUTTER E), TORSION	
166	4-957-308-02	RING, REINFORCEMENT	
167	4-957-267-02	COLLAR, REINFORCEMENT	
168	3-704-244-84	SCREW (P1.7X5.0)	
169	4-955-529-01	CASE (BATTERY)	
170	2-134-636-41	SCREW (M1.7X4.0)	
171	4-957-572-01	SHEET (E-E), INSULATING	
172	4-955-511-01	DAMPER	
173	4-955-516-01	HOLDER (DAMPER)	
174	4-955-538-01	SPRING (MD1), COMPRESSION (BLACK)	
175	4-955-539-01	SPRING (MD2), COMPRESSION (WHITE)	
176	4-955-540-01	SPRING (MD3), COMPRESSION (BLUE)	
* 177	4-956-096-01	COVER (O H)	
* 178	A-3276-055-A	MAIN BOARD, COMPLETE (MD)	
* 179	A-3275-782-A	POWER BOARD, COMPLETE (MD)	
180	4-955-523-03	HOLDER (TERMINAL)	
181	2-123-861-01	SCREW, TAPPING, P1.7X3	

5-5. MECHANISM DECK ASSEMBLY-1 (MT-MZ1-106)

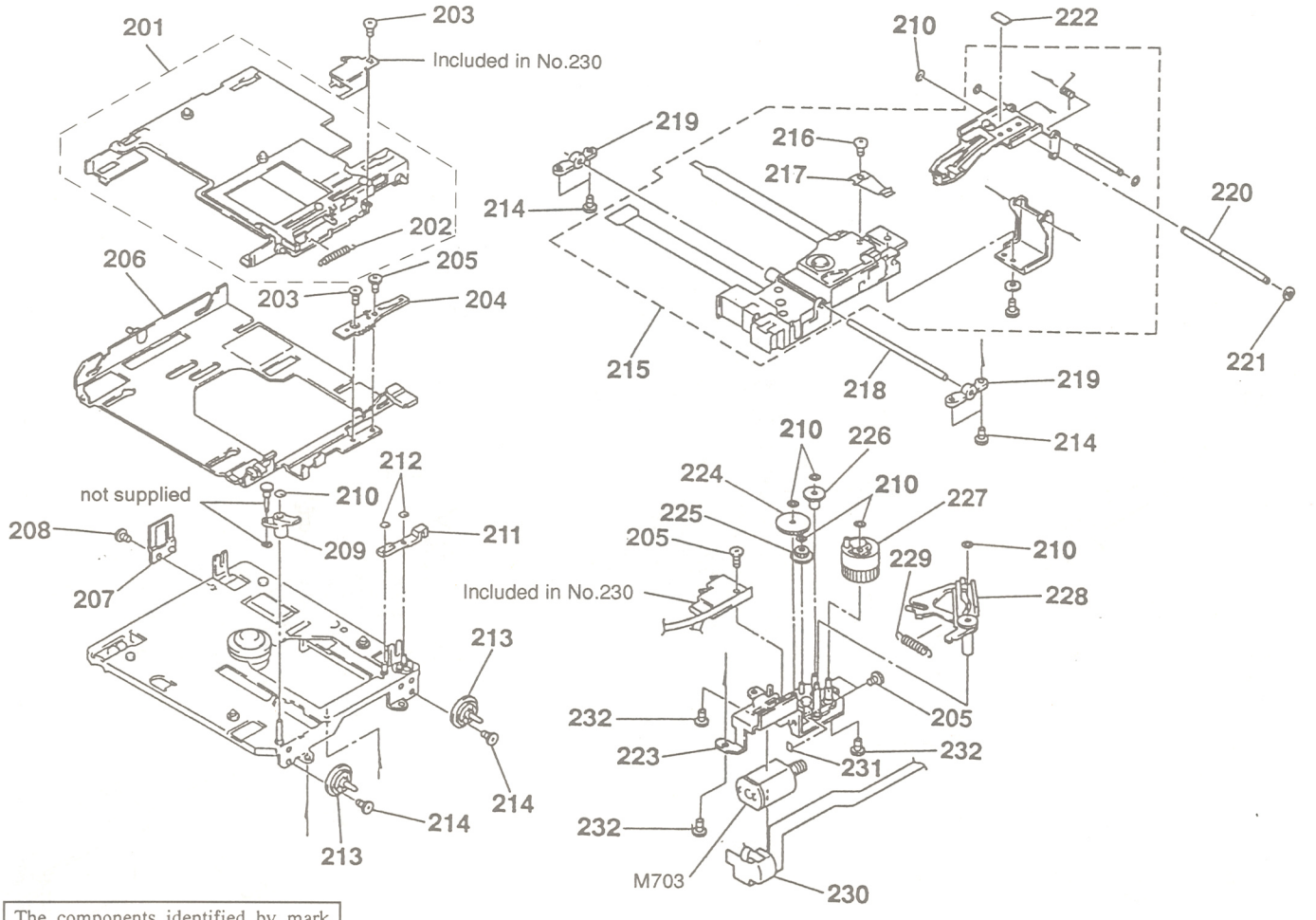

The components identified by mark ⚠ or dotted line with mark ⚠ are critical for safety. Replace only with part number specified.
Les composants identifiés par une marque ⚠ sont critiques pour la sécurité. Ne les remplacer que par une piéce portant le numéro spécifié.

Ref.No.	Part No.	Description	Remark
201	X-4943-091-1	HOLDER ASSY	
202	3-385-103-01	SPRING (LOCK), TENSION	
203	3-363-220-21	SCREW (M1.4X1.8)	
204	4-955-498-01	LEVER (RACK)	
205	3-704-197-02	SCREW (M1.4X1.6), LOCKING	
206	X-4943-088-1	SLIDER ASSY, MAIN	
207	4-955-520-01	STOPPER, SHAFT	
208	4-955-841-01	SCREW	
209	4-955-500-01	LEVER (POSITIONING)	
210	3-578-242-11	WASHER	
211	4-955-499-01	SLIDER (RP)	
212	3-338-645-31	WASHER (0.8-2.5)	
213	X-4943-083-3	HOLDER (B)ASSY,VIBRATION PROOF	
214	4-955-841-21	SCREW	
⚠215	A-3263-173-A	OP BLOCK ASSY (KMS-130B)	
216	3-704-197-21	SCREW (M1.4X2.5), LOCKING	
217	4-955-517-01	SPRING, FEED	

Ref.No.	Part No.	Description	Remark
218	4-959-632-01	SHAFT (OP), GUIDE	
219	4-955-505-01	RETAINER, SHAFT, GUIDE	
220	4-955-510-01	SHAFT (REC)	
221	3-315-384-31	WASHER, STOPPER	
222	3-831-441-11	CUSHION	
223	X-4943-084-6	CHASSIS ASSY, GEAR	
224	4-955-495-01	WHEEL, WORM	
225	4-955-496-01	GEAR (MIDWAY B)	
226	4-955-497-01	GEAR (MIDWAY C)	
227	X-4943-085-1	GEAR (LOADING) ASSY	
228	X-4943-089-1	LEVER (LOADING) ASSY	
229	3-385-104-01	SPRING (LIMITER), TENSION	
230	1-466-925-11	SWITCH UNIT (DETECTION)	
* 231	3-317-577-01	SPACER (Z)	
232	3-704-243-11	SCREW (P1.7X2.0)	
M703	1-698-035-11	MOTOR, DC (LOADING)	

5-6. MECHANISM DECK ASSEMBLY-2 (MT-MZ1-106)

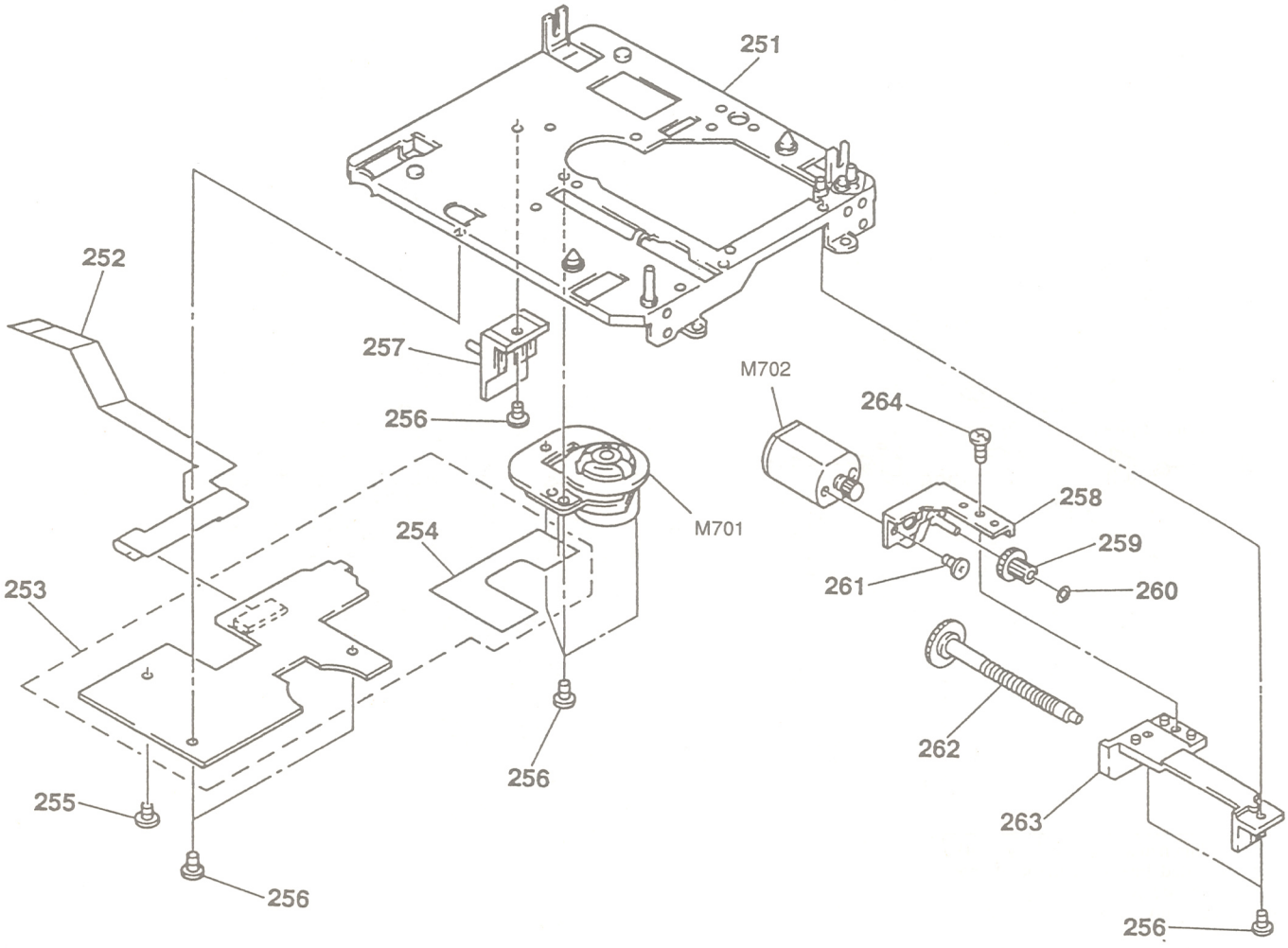

Ref. No.	Part No.	Description	Remark
251	X-4943-080-1	CHASSIS ASSY	
252	1-649-066-11	RELAY (B) FLEXIBLE BOARD	
253	A-3275-714-A	CLV BOARD, COMPLETE	
254	1-645-921-11	CLV FLEXIBLE BOARD	
255	2-134-636-21	SCREW (M1.7X2.5)	
256	4-955-841-21	SCREW	
257	X-4943-082-3	HOLDER (A)ASSY, VIBRATION PROOF	
258	X-4943-087-3	HOLDER ASSY, MOTOR	
259	4-955-518-01	GEAR (B)	
260	3-325-394-11	WASHER, STOPPER	
261	3-704-197-02	SCREW (M1.4X1.6), LOCKING	
262	A-3263-172-A	SCREW BLOCK ASSY, LEAD	
263	4-955-519-02	BRACKET (A)	
264	2-123-861-01	SCREW, TAPPING, P1.7X3	
M701	1-698-007-12	MOTOR (SPINDLE)	
M702	1-698-008-11	MOTOR, DC (SLED)	

SECTION 6
ELECTRICAL PARTS LIST

ANTENNA TERMINAL
AUDIO SWITCH-1
AUDIO SWITCH-2
CONTROL

NOTE:

The components identified by mark ⚠ or dotted line with mark ⚠ are critical for safety.
Replace only with part number specified.

Les composants identifiés par une marque ⚠ sont critiques pour la sécurité.
Ne les remplacer que par une piéce portant le numéro spécifié.

When indicating parts by reference number, please include the board name.

- Due to standardization, replacements in the parts list may be different from the parts specified in the diagrams or the components used on the set.
- -XX, -X mean standardized parts, so they may have some difference from the original one.
- RESISTORS
  All resistors are in ohms
  METAL: Metal-film resistor
  METAL OXIDE: Metal Oxide-film resistor
  F : nonflammable
- Color Indication of Appearance Parts Example:
  KNOB, BALANCE (WHITE) . . . (RED)
  ↑ Parts color ↑ Cabinet's color
- Items marked "*" are not stocked since they are seldom required for routine service. Some delay should be anticipated when ordering these items.
- SEMICONDUCTORS
  In each case, u: μ , for example:
  uA...: μA..., uPA...: μPA...,
  uPB...: μPB..., uPC...: μPC...,
  uPD...: μPD...
- CAPACITORS
  uF : μF
- COILS
  uH : μH
- Hardware (# mark) list is given in the last of this parts list.
- G: German model
- IT: Italian model

Ref. No.	Part No.	Description	Remark
*	1-647-788-21	ANTENNA TERMINAL BOARD, COMPLETE	
		**********	
		< CONNECTOR >	
* CN2	1-750-510-11	PIN, CONNECTOR (PC BOARD)	
* CN3	1-750-510-11	PIN, CONNECTOR (PC BOARD)	
* CN5	1-564-718-11	PIN, CONNECTOR (SMALL TYPE) 2P	
		< COIL >	
L9	1-408-646-11	COIL (ANT)	
**********			
*	1-648-204-11	AUDIO SWITCH-1 BOARD	
		**********	
		< TRANSISTOR >	
Q309	8-729-106-60	TRANSISTOR 2SB1115A	
Q310	8-729-900-52	TRANSISTOR DTC114YK	
		< RESISTOR >	
R332	1-216-089-00	METAL CHIP 47K 5% 1/10W	
R333	1-216-057-00	METAL CHIP 2.2K 5% 1/10W	
**********			
*	1-648-204-11	AUDIO SWITCH-2 BOARD	
		**********	
		< TRANSISTOR >	
Q910	8-729-106-60	TRANSISTOR 2SB1115A	
Q911	8-729-900-52	TRANSISTOR DTC114YK	
		< RESISTOR >	
R924	1-216-089-00	METAL CHIP 47K 5% 1/10W	
R925	1-216-057-00	METAL CHIP 2.2K 5% 1/10W	
**********			

Ref. No.	Part No.	Description			Remark
*	A-3264-587-A	CONTROL BOARD, COMPLETE (AEP, UK, G, IT)			
		**********			
*	A-3264-623-A	CONTROL BOARD, COMPLETE (US, Canadian)			
		**********			
	7-685-861-01	SCREW +BVTT 2.6X5 (S)			
		< CAPACITOR >			
C151	1-126-044-11	ELECT	1uF	20%	50V
C152	1-130-481-00	MYLAR	0.0068uF	5%	50V
C153	1-130-481-00	MYLAR	0.0068uF	5%	50V
C154	1-130-469-00	MYLAR	680PF	5%	50V
C155	1-162-213-31	CERAMIC	39PF	5%	50V
C251	1-126-044-11	ELECT	1uF	20%	50V
C252	1-130-481-00	MYLAR	0.0068uF	5%	50V
C253	1-130-481-00	MYLAR	0.0068uF	5%	50V
C254	1-130-469-00	MYLAR	680PF	5%	50V
C255	1-162-213-31	CERAMIC	39PF	5%	50V
C351	1-124-994-11	ELECT	100uF	20%	10V
C352	1-124-994-11	ELECT	100uF	20%	10V
C501	1-131-370-00	TANTALUM	6.8uF	10%	16V
C502	1-161-057-00	CERAMIC	0.033uF	10%	50V
C503	1-126-916-11	ELECT	1000uF	20%	6.3V
C582	1-124-443-00	ELECT	100uF	20%	10V
C587	1-161-379-00	CERAMIC	0.01uF	20%	25V
		< CONNECTOR >			
* CN501	1-691-609-11	HOUSING, CONNECTOR (PC BOARD)			
* CN502	1-691-609-11	HOUSING, CONNECTOR (PC BOARD)			
* CN503	1-564-718-11	PIN, CONNECTOR (SMALL TYPE) 2P			
* CN504	1-564-718-11	PIN, CONNECTOR (SMALL TYPE) 2P			
* CN505	1-750-170-11	CONNECTOR, BOARD TO BOARD 16P			
		< DIODE >			
D501	8-719-027-79	DIODE BR3368S (OPERATION)			
D502	8-719-027-79	DIODE BR3368S (AEP, UK, G, IT)			
D503	8-719-027-79	DIODE BR3368S (REC)			
D504	8-719-027-79	DIODE BR3368S (REC)			
		< EL LUMINOUS ELEMENT >			
EL501	1-810-033-11	LUMINOUS ELEMENT, EL			

CONTROL

Ref.No.	Part No.	Description				Remark
		< IC >				
IC351	8-759-710-98	IC NJM2100D				
IC501	8-749-923-11	IC GP1U58XB				
		< JACK >				
J351	1-691-668-11	JACK (PHONES)				
		< COIL >				
L501	1-410-978-11	INDUCTOR	150uH			
L502	1-410-971-11	INDUCTOR	10uH			
L574	1-410-977-11	INDUCTOR	100uH			
L575	1-410-977-11	INDUCTOR	100uH			
		< LINE FILTER >				
LF501	1-402-984-11	FILTER, COMMON MODE				
		< FLUORECENT INDICATOR >				
ND501	1-809-993-11	DISPLAY PANEL, LIQUID CRYSTAL				
		< TRANSISTOR >				
Q501	8-729-119-78	TRANSISTOR	2SC2785-HFE			
Q502	8-729-902-80	TRANSISTOR	DTA114YS			
Q503	8-729-806-30	TRANSISTOR	2SC4048			
Q581	8-729-119-76	TRANSISTOR	2SA1175-HFE			
Q582	8-729-119-76	TRANSISTOR	2SA1175-HFE			
		< RESISTOR >				
R151	1-249-438-11	CARBON	56K	5%	1/4W	
R152	1-249-438-11	CARBON	56K	5%	1/4W	
R153	1-249-429-11	CARBON	10K	5%	1/4W	
R154	1-249-431-11	CARBON	15K	5%	1/4W	
R155	1-249-431-11	CARBON	15K	5%	1/4W	
R251	1-249-438-11	CARBON	56K	5%	1/4W	
R252	1-249-438-11	CARBON	56K	5%	1/4W	
R253	1-249-429-11	CARBON	10K	5%	1/4W	
R254	1-249-431-11	CARBON	15K	5%	1/4W	
R255	1-249-431-11	CARBON	15K	5%	1/4W	
R351	1-249-405-11	CARBON	100	5%	1/4W	F
R352	1-249-422-11	CARBON	2.7K	5%	1/4W	F
R353	1-249-422-11	CARBON	2.7K	5%	1/4W	F
R501	1-215-412-00	METAL	430	1%	1/6W	
R502	1-215-414-00	METAL	510	1%	1/6W	
R503	1-215-416-00	METAL	620	1%	1/6W	
R504	1-215-419-00	METAL	820	1%	1/6W	
R505	1-215-421-00	METAL	1K	1%	1/6W	
R506	1-215-412-00	METAL	430	1%	1/6W	
R507	1-215-414-00	METAL	510	1%	1/6W	
R508	1-215-416-00	METAL	620	1%	1/6W	
R509	1-215-419-00	METAL	820	1%	1/6W	
R510	1-215-421-00	METAL	1K	1%	1/6W	
R511	1-215-412-00	METAL	430	1%	1/6W	
R512	1-215-414-00	METAL	510	1%	1/6W	
R513	1-215-416-00	METAL	620	1%	1/6W	
R514	1-215-419-00	METAL	820	1%	1/6W	
R515	1-215-421-00	METAL	1K	1%	1/6W	
R516	1-215-424-00	METAL	1.3K	1%	1/6W	
R517	1-215-427-00	METAL	1.8K	1%	1/6W	
R518	1-215-432-00	METAL	3K	1%	1/6W	
R519	1-215-437-00	METAL	4.7K	1%	1/6W	
R520	1-215-444-00	METAL	9.1K	1%	1/6W	
R521	1-215-455-00	METAL	27K	1%	1/6W	
R522	1-215-412-00	METAL	430	1%	1/6W	
R523	1-249-418-11	CARBON	1.2K	5%	1/4W	F
R524	1-215-417-00	METAL	680	1%	1/6W	
R525	1-249-412-11	CARBON	390	5%	1/4W	F
R526	1-249-412-11	CARBON	390	5%	1/4W	F
R527	1-249-424-11	CARBON	3.9K	5%	1/4W	F
R528	1-249-405-11	CARBON	100	5%	1/4W	F
R529	1-215-437-00	METAL	4.7K	1%	1/6W	
R530	1-215-437-00	METAL	4.7K	1%	1/6W	
R531	1-215-437-00	METAL	4.7K	1%	1/6W	
R532	1-215-437-00	METAL	4.7K	1%	1/6W	
R533	1-249-437-11	CARBON	47K	5%	1/4W	(US, Canadian)
R534	1-249-441-11	CARBON	100K	5%	1/4W	(US, Canadian)
R535	1-247-887-00	CARBON	220K	5%	1/4W	
R536	1-249-425-11	CARBON	4.7K	5%	1/4W	F
R537	1-249-441-11	CARBON	100K	5%	1/4W	
R538	1-249-441-11	CARBON	100K	5%	1/4W	
R583	1-249-429-11	CARBON	10K	5%	1/4W	
		< VARIABLE RESISTOR >				
RV351	1-223-335-11	RES, VAR, CARBON 100K/100K (BASS)				
RV352	1-223-335-11	RES, VAR, CARBON 100K/100K (TREBLE)				
		< SWITCH >				
S501	1-572-198-11	SWITCH, KEY BOARD (POWER)				
S502	1-572-198-11	SWITCH, KEY BOARD (FUNCTION)				
S503	1-572-198-11	SWITCH, KEY BOARD (CLOCK)				
S504	1-572-198-11	SWITCH, KEY BOARD (TIMER)				
S505	1-572-198-11	SWITCH, KEY BOARD (SLEEP)				
S506	1-572-198-11	SWITCH, KEY BOARD (STANDBY)				
S507	1-572-198-11	SWITCH, KEY BOARD (RADIO BAND)				
S508	1-572-198-11	SWITCH, KEY BOARD (PRESET +)				
S509	1-572-198-11	SWITCH, KEY BOARD (PRESET -)				
S510	1-572-198-11	SWITCH, KEY BOARD (TUNING, TIME SET +)				
S511	1-572-198-11	SWITCH, KEY BOARD (TUNING, TIME SET -)				
S512	1-572-198-11	SWITCH, KEY BOARD (MODE)				

Ref.No.	Part No.	Description	Remark
S513	1-572-198-11	SWITCH, KEY BOARD (DATE)	
S514	1-572-198-11	SWITCH, KEY BOARD (▶▶)	
S515	1-572-198-11	SWITCH, KEY BOARD (◀◀)	
S516	1-572-198-11	SWITCH, KEY BOARD (DISC NAME)	
S517	1-572-198-11	SWITCH, KEY BOARD (TRACK NAME)	
S518	1-572-198-11	SWITCH, KEY BOARD (▲)	
S519	1-572-198-11	SWITCH, KEY BOARD (▶▶|)	
S520	1-572-198-11	SWITCH, KEY BOARD (|◀◀)	
S521	1-572-198-11	SWITCH, KEY BOARD (■)	
S522	1-572-198-11	SWITCH, KEY BOARD (▮▮)	
S523	1-572-198-11	SWITCH, KEY BOARD (▷)	
S524	1-572-198-11	SWITCH, KEY BOARD (●)	
S525	1-572-198-11	SWITCH, KEY BOARD (EDIT)	
S526	1-572-198-11	SWITCH, KEY BOARD (RESET)	
S527	1-572-347-21	SWITCH, SLIDE (INPUT SELECT)	
		< TRANSFORMER >	
T501	1-450-814-11	TRANSFORMER, INVERTER	
**********			
*	A-3264-583-A	DECODER BOARD	
		**********	
		< CONNECTOR >	
* CN701	1-569-278-11	PIN, CONNECTOR (PC BOARD) 12P	
		< DIODE >	
D701	8-719-400-18	DIODE MA152WK	
		< IC >	
IC701	8-759-242-29	IC TC74HC4514AP	
		< TRANSISTOR >	
Q701	8-729-920-31	TRANSISTOR DTC343TK	
Q702	8-729-920-31	TRANSISTOR DTC343TK	
Q703	8-729-920-31	TRANSISTOR DTC343TK	
Q704	8-729-920-31	TRANSISTOR DTC343TK	
Q705	8-729-920-31	TRANSISTOR DTC343TK	
Q706	8-729-920-31	TRANSISTOR DTC343TK	
Q707	8-729-920-31	TRANSISTOR DTC343TK	
Q708	8-729-920-31	TRANSISTOR DTC343TK	
Q709	8-729-920-31	TRANSISTOR DTC343TK	
Q710	8-729-920-31	TRANSISTOR DTC343TK	
Q711	8-729-920-31	TRANSISTOR DTC343TK	
Q712	8-729-920-31	TRANSISTOR DTC343TK	
Q713	8-729-920-31	TRANSISTOR DTC343TK	
Q714	8-729-920-31	TRANSISTOR DTC343TK	
Q715	8-729-920-31	TRANSISTOR DTC343TK	

Ref.No.	Part No.	Description	Remark
		< RESISTOR >	
R701	1-216-634-11	METAL CHIP 200 0.5% 1/10W	
R702	1-216-635-11	METAL CHIP 220 0.5% 1/10W	
R703	1-216-637-11	METAL CHIP 270 0.5% 1/10W	
R704	1-216-639-11	METAL CHIP 330 0.5% 1/10W	
R705	1-216-642-11	METAL CHIP 430 0.5% 1/10W	
R706	1-216-644-11	METAL CHIP 510 0.5% 1/10W	
R707	1-216-646-11	METAL CHIP 620 0.5% 1/10W	
R708	1-216-649-11	METAL CHIP 820 0.5% 1/10W	
R709	1-216-652-11	METAL CHIP 1.1K 0.5% 1/10W	
R710	1-216-655-11	METAL CHIP 1.5K 0.5% 1/10W	
R711	1-216-660-11	METAL CHIP 2.4K 0.5% 1/10W	
R712	1-216-665-11	METAL CHIP 3.9K 0.5% 1/10W	
R713	1-216-672-11	METAL CHIP 7.5K 0.5% 1/10W	
R714	1-216-684-91	METAL CHIP 24K 0.50% 1/10W	
R715	1-216-089-00	METAL CHIP 47K 5% 1/10W	
R716	1-216-089-00	METAL CHIP 47K 5% 1/10W	
R717	1-216-089-00	METAL CHIP 47K 5% 1/10W	
R718	1-216-089-00	METAL CHIP 47K 5% 1/10W	
R719	1-216-089-00	METAL CHIP 47K 5% 1/10W	
R720	1-216-089-00	METAL CHIP 47K 5% 1/10W	
R721	1-216-089-00	METAL CHIP 47K 5% 1/10W	
R722	1-216-089-00	METAL CHIP 47K 5% 1/10W	
R723	1-216-089-00	METAL CHIP 47K 5% 1/10W	
R724	1-216-089-00	METAL CHIP 47K 5% 1/10W	
R725	1-216-089-00	METAL CHIP 47K 5% 1/10W	
R726	1-216-089-00	METAL CHIP 47K 5% 1/10W	
R727	1-216-089-00	METAL CHIP 47K 5% 1/10W	
R728	1-216-089-00	METAL CHIP 47K 5% 1/10W	
R729	1-216-089-00	METAL CHIP 47K 5% 1/10W	
**********			
*	1-648-326-11	DIGITAL IN BOARD	
		**********	
		< TRANSISTOR >	
Q803	8-729-900-52	TRANSISTOR DTC114YK	
Q804	8-729-901-46	TRANSISTOR DTA114YK	
**********			
*	A-3264-581-A	FILTER BOARD, COMPLETE	
		**********	
		< CAPACITOR >	
C451	1-239-601-21	FILTER, CHIP EMI	
C452	1-239-601-21	FILTER, CHIP EMI	
C453	1-239-601-21	FILTER, CHIP EMI	
C454	1-163-117-00	CERAMIC CHIP 100PF 5% 50V	
C455	1-239-601-21	FILTER, CHIP EMI	

FILTER IO

Ref.No.	Part No.	Description	Remark
C456	1-239-601-21	FILTER, CHIP EMI	
C457	1-239-601-21	FILTER, CHIP EMI	
C458	1-239-601-21	FILTER, CHIP EMI	
C459	1-239-601-21	FILTER, CHIP EMI	
C460	1-239-601-21	FILTER, CHIP EMI	
C461	1-239-601-21	FILTER, CHIP EMI	
C462	1-239-601-21	FILTER, CHIP EMI	
C463	1-239-601-21	FILTER, CHIP EMI	
C464	1-239-601-21	FILTER, CHIP EMI	
C465	1-239-601-21	FILTER, CHIP EMI	
C466	1-239-601-21	FILTER, CHIP EMI	
C467	1-239-601-21	FILTER, CHIP EMI	
C468	1-239-601-21	FILTER, CHIP EMI	
C469	1-239-601-21	FILTER, CHIP EMI	
C470	1-239-601-21	FILTER, CHIP EMI	
C471	1-239-601-21	FILTER, CHIP EMI	
C472	1-239-601-21	FILTER, CHIP EMI	
C473	1-239-601-21	FILTER, CHIP EMI	
C474	1-239-601-21	FILTER, CHIP EMI	
C475	1-239-601-21	FILTER, CHIP EMI	
C476	1-239-601-21	FILTER, CHIP EMI	
C477	1-239-601-21	FILTER, CHIP EMI	
C478	1-239-601-21	FILTER, CHIP EMI	
C479	1-163-141-00	CERAMIC CHIP 0.001uF 5% 50V	
C480	1-163-141-00	CERAMIC CHIP 0.001uF 5% 50V	
C483	1-239-601-21	FILTER, CHIP EMI	
		< CONNECTOR >	
* CN451	1-750-524-11	CONNECTOR, FFC/FPC 26P	
* CN452	1-750-524-11	CONNECTOR, FFC/FPC 26P	
* CN453	1-750-536-11	CONNECTOR, FLEXIBLE 6P	
* CN454	1-750-536-11	CONNECTOR, FLEXIBLE 6P	
* CN455	1-750-537-11	CONNECTOR, FLEXIBLE 7P	
* CN456	1-750-536-11	CONNECTOR, FLEXIBLE 6P	
* CN457	1-750-537-11	CONNECTOR, FLEXIBLE 7P	
* CN458	1-750-537-11	CONNECTOR, FLEXIBLE 7P	
		< DIODE >	
D401	8-719-400-18	DIODE MA152WK	
		< JUMPER RESISTOR >	
JR50	1-216-295-00	METAL CHIP 0 5% 1/10W	
JR51	1-216-295-00	METAL CHIP 0 5% 1/10W	
JR52	1-216-295-00	METAL CHIP 0 5% 1/10W	
JR53	1-216-295-00	METAL CHIP 0 5% 1/10W	
JR54	1-216-295-00	METAL CHIP 0 5% 1/10W	
JR55	1-216-295-00	METAL CHIP 0 5% 1/10W	
JR56	1-216-295-00	METAL CHIP 0 5% 1/10W	

Ref.No.	Part No.	Description	Remark
		< LINE FILTER >	
LF400	1-402-951-11	COIL, LINE FILTER	
		< TRANSISTOR >	
Q405	8-729-421-19	TRANSISTOR UN2213	
		< RESISTOR >	
R400	1-216-061-00	METAL CHIP 3.3K 5% 1/10W	
R401	1-216-065-00	METAL CHIP 4.7K 5% 1/10W	
R402	1-216-073-00	METAL CHIP 10K 5% 1/10W	
R403	1-216-073-00	METAL CHIP 10K 5% 1/10W	
R404	1-216-073-00	METAL CHIP 10K 5% 1/10W	
R405	1-216-073-00	METAL CHIP 10K 5% 1/10W	
R408	1-216-097-00	METAL CHIP 100K 5% 1/10W	
**********		**********	
*	A-3264-200-A	IO BOARD, COMPLETE	
		**********	
*	1-751-002-11	WIRE, PARALLEL (16 CORE)	
*	1-751-003-11	WIRE, PARALLEL (28 CORE)	
*	1-751-004-11	WIRE, PARALLEL (6 CORE)	
*	1-751-005-11	WIRE, PARALLEL (6 CORE)	
*	1-751-006-11	WIRE, PARALLEL (7 CORE)	
		< CAPACITOR >	
C601	1-124-584-00	ELECT 100uF 20% 10V	
C602	1-163-141-00	CERAMIC CHIP 0.001uF 5% 50V	
C603	1-163-141-00	CERAMIC CHIP 0.001uF 5% 50V	
C604	1-164-232-11	CERAMIC CHIP 0.01uF 50V	
C605	1-124-584-00	ELECT 100uF 20% 10V	
C606	1-163-141-00	CERAMIC CHIP 0.001uF 5% 50V	
C607	1-124-584-00	ELECT 100uF 20% 10V	
C608	1-163-141-00	CERAMIC CHIP 0.001uF 5% 50V	
C613	1-164-232-11	CERAMIC CHIP 0.01uF 50V	
C614	1-164-232-11	CERAMIC CHIP 0.01uF 50V	
C615	1-164-232-11	CERAMIC CHIP 0.01uF 50V	
C651	1-424-464-21	FILTER, NOISE	
C652	1-424-464-21	FILTER, NOISE	
C653	1-424-464-21	FILTER, NOISE	
C654	1-424-464-21	FILTER, NOISE	
C656	1-424-464-21	FILTER, NOISE	
C657	1-424-464-21	FILTER, NOISE	
C658	1-424-464-21	FILTER, NOISE	
C660	1-424-464-21	FILTER, NOISE	
C662	1-424-464-21	FILTER, NOISE	
C664	1-424-464-21	FILTER, NOISE	
C665	1-424-464-21	FILTER, NOISE	
C666	1-424-464-21	FILTER, NOISE	
C667	1-424-464-21	FILTER, NOISE	

Ref. No.	Part No.	Description				Remark
C668	1-424-464-21	FILTER, NOISE				
C669	1-424-464-21	FILTER, NOISE				
C670	1-424-464-21	FILTER, NOISE				
C671	1-424-464-21	FILTER, NOISE				
C672	1-424-464-21	FILTER, NOISE				
C673	1-424-464-21	FILTER, NOISE				
C674	1-406-579-11	FILTER, NOISE				
C675	1-424-464-21	FILTER, NOISE				
C676	1-424-464-21	FILTER, NOISE				
C677	1-424-464-21	FILTER, NOISE				
C678	1-424-464-21	FILTER, NOISE				
C679	1-424-464-21	FILTER, NOISE				
C681	1-424-464-21	FILTER, NOISE				
C683	1-424-464-21	FILTER, NOISE				
C684	1-424-464-21	FILTER, NOISE				
C685	1-424-464-21	FILTER, NOISE				
C686	1-424-464-21	FILTER, NOISE				
C687	1-424-464-21	FILTER, NOISE				
C688	1-424-464-21	FILTER, NOISE				
C689	1-424-464-21	FILTER, NOISE				
C690	1-126-926-11	ELECT	1000uF	20%	10V	
C691	1-126-926-11	ELECT	1000uF	20%	10V	
C694	1-164-346-11	CERAMIC CHIP	1uF		16V	
C699	1-163-038-00	CERAMIC CHIP	0.1uF		25V	
		< CONNECTOR >				
CN601	1-695-825-11	HOUSING, CONNECTOR 16P				
* CN602	1-564-712-11	PIN, CONNECTOR (SMALL TYPE)10P				
* CN603	1-564-705-11	PIN, CONNECTOR (SMALL TYPE) 3P				
* CN604	1-564-705-11	PIN, CONNECTOR (SMALL TYPE) 3P				
* CN605	1-569-974-11	PIN, CONNECTOR (PC BOARD) 3P				
* CN606	1-564-708-11	PIN, CONNECTOR (SMALL TYPE) 6P				
* CN611	1-569-942-11	SOCKET, CONNECTOR 26P				
* CN615	1-569-926-11	SOCKET, CONNECTOR 7P				
* CN616	1-569-926-11	SOCKET, CONNECTOR 7P				
* CN621	1-569-925-11	SOCKET, CONNECTOR 6P				
		< DIODE >				
D601	8-719-800-76	DIODE	1SS226			
D602	8-719-400-18	DIODE	MA152WK			
D603	8-719-400-18	DIODE	MA152WK			
		< IC >				
IC601	8-759-161-70	IC	IDT7200S50SD-TR			
IC602	8-759-925-73	IC	SN74HC03NS			
IC603	8-759-925-76	IC	SN74HC08ANS			
IC614	8-759-058-82	IC	S-81240AG-RJ-S			
		< JUMPER RESISTOR >				
JR1	1-216-295-00	METAL CHIP	0	5%	1/10W	
JR2	1-216-295-00	METAL CHIP	0	5%	1/10W	
		< COIL >				
L600	1-412-006-31	INDUCTOR CHIP	10uH			
L601	1-408-421-00	INDUCTOR	100uH			
L602	1-408-421-00	INDUCTOR	100uH			
L603	1-408-421-00	INDUCTOR	100uH			
L604	1-410-977-11	INDUCTOR	100uH			
L605	1-414-211-11	INDUCTOR	100uH			
L606	1-412-006-31	INDUCTOR CHIP	10uH			
L607	1-410-979-11	INDUCTOR	220uH			
L608	1-410-979-11	INDUCTOR	220uH			
L610	1-412-006-31	INDUCTOR CHIP	10uH			
L611	1-410-979-11	INDUCTOR	220uH			
		< TRANSISTOR >				
Q601	8-729-901-46	TRANSISTOR	DTA114YK			
Q602	8-729-421-19	TRANSISTOR	UN2213			
Q603	8-729-421-19	TRANSISTOR	UN2213			
Q604	8-729-421-19	TRANSISTOR	UN2213			
Q605	8-729-421-19	TRANSISTOR	UN2213			
		< RESISTOR >				
R600	1-216-049-00	METAL CHIP	1K	5%	1/10W	
R601	1-216-073-00	METAL CHIP	10K	5%	1/10W	
R602	1-216-049-00	METAL CHIP	1K	5%	1/10W	
R603	1-216-073-00	METAL CHIP	10K	5%	1/10W	
R604	1-216-073-00	METAL CHIP	10K	5%	1/10W	
R607	1-216-049-00	METAL CHIP	1K	5%	1/10W	
R608	1-216-295-00	METAL CHIP	0	5%	1/10W	
R610	1-216-295-00	METAL CHIP	0	5%	1/10W	
R611	1-216-097-00	METAL CHIP	100K	5%	1/10W	
R612	1-216-097-00	METAL CHIP	100K	5%	1/10W	
R613	1-216-097-00	METAL CHIP	100K	5%	1/10W	
R614	1-216-097-00	METAL CHIP	100K	5%	1/10W	
R615	1-216-097-00	METAL CHIP	100K	5%	1/10W	
R616	1-216-073-00	METAL CHIP	10K	5%	1/10W	
R617	1-216-097-00	METAL CHIP	100K	5%	1/10W	
R618	1-216-097-00	METAL CHIP	100K	5%	1/10W	
R619	1-216-097-00	METAL CHIP	100K	5%	1/10W	
R620	1-216-097-00	METAL CHIP	100K	5%	1/10W	
R621	1-216-073-00	METAL CHIP	10K	5%	1/10W	
R622	1-216-073-00	METAL CHIP	10K	5%	1/10W	
R623	1-216-073-00	METAL CHIP	10K	5%	1/10W	
R624	1-216-073-00	METAL CHIP	10K	5%	1/10W	
R625	1-216-073-00	METAL CHIP	10K	5%	1/10W	
R626	1-216-073-00	METAL CHIP	10K	5%	1/10W	
R627	1-216-073-00	METAL CHIP	10K	5%	1/10W	
R628	1-216-073-00	METAL CHIP	10K	5%	1/10W	
R629	1-216-073-00	METAL CHIP	10K	5%	1/10W	

IO INLET LOOP ANTENNA MAIN

Ref. No.	Part No.	Description				Remark
R630	1-216-073-00	METAL CHIP	10K	5%	1/10W	
R631	1-216-295-00	METAL CHIP	0	5%	1/10W	
R632	1-216-295-00	METAL CHIP	0	5%	1/10W	
R633	1-216-013-00	METAL CHIP	33	5%	1/10W	
R634	1-216-073-00	METAL CHIP	10K	5%	1/10W	
R635	1-216-049-00	METAL CHIP	1K	5%	1/10W	
R636	1-216-063-00	METAL CHIP	3.9K	5%	1/10W	
R637	1-216-105-00	METAL CHIP	220K	5%	1/10W	
R638	1-216-689-11	METAL CHIP	39K	0.5%	1/10W	
R639	1-216-061-00	METAL CHIP	3.3K	5%	1/10W	
R640	1-216-073-00	METAL CHIP	10K	5%	1/10W	
R641	1-216-097-00	METAL CHIP	100K	5%	1/10W	
R642	1-216-097-00	METAL CHIP	100K	5%	1/10W	
R643	1-216-099-00	METAL CHIP	120K	5%	1/10W	
R644	1-216-061-00	METAL CHIP	3.3K	5%	1/10W	
R645	1-216-073-00	METAL CHIP	10K	5%	1/10W	
R646	1-216-073-00	METAL CHIP	10K	5%	1/10W	
R647	1-216-073-00	METAL CHIP	10K	5%	1/10W	
R648	1-216-065-00	METAL CHIP	4.7K	5%	1/10W	
R649	1-216-065-00	METAL CHIP	4.7K	5%	1/10W	
R650	1-216-065-00	METAL CHIP	4.7K	5%	1/10W	
R651	1-216-065-00	METAL CHIP	4.7K	5%	1/10W	
R652	1-216-065-00	METAL CHIP	4.7K	5%	1/10W	
R653	1-216-065-00	METAL CHIP	4.7K	5%	1/10W	
R654	1-216-065-00	METAL CHIP	4.7K	5%	1/10W	
R655	1-216-065-00	METAL CHIP	4.7K	5%	1/10W	
R656	1-216-065-00	METAL CHIP	4.7K	5%	1/10W	
R658	1-216-295-00	METAL CHIP	0	5%	1/10W	
R660	1-216-073-00	METAL CHIP	10K	5%	1/10W	
R662	1-216-073-00	METAL CHIP	10K	5%	1/10W	
R663	1-216-073-00	METAL CHIP	10K	5%	1/10W	
R664	1-216-073-00	METAL CHIP	10K	5%	1/10W	
R665	1-216-073-00	METAL CHIP	10K	5%	1/10W	
R666	1-216-049-00	METAL CHIP	1K	5%	1/10W	
R667	1-216-049-00	METAL CHIP	1K	5%	1/10W	
R668	1-216-049-00	METAL CHIP	1K	5%	1/10W	
R669	1-216-049-00	METAL CHIP	1K	5%	1/10W	
R670	1-216-073-00	METAL CHIP	10K	5%	1/10W	
R688	1-216-295-00	METAL CHIP	0	5%	1/10W	

****

* 1-649-096-11 INLET BOARD (US, Canadian)
****

* 1-649-639-11 INLET BOARD (AEP, UK, G, IT)
****

< CONNECTOR >

⚠CN901 1-526-838-11 INLET, AC 2P (AEP, UK, G, IT)
⚠CN901 1-540-009-11 INLET, AC 2P (US, Canadian)
* CN902 1-569-715-11 PIN, CONNECTOR (PC BOARD) 2P

Ref. No.	Part No.	Description				Remark
		< FUSE >				
⚠F902	1-576-104-11	FUSE (2A) (US, Canadian)				
		< FUSE HOLDER >				
FH903	1-533-233-11	HOLDER, FUSE (US, Canadian)				
FH904	1-533-233-11	HOLDER, FUSE (US, Canadian)				
		< LINE FILTER >				
LF901	1-402-663-11	TRANSFORMER, LINE FILTER (LFT)				

****

* 1-647-915-21 LOOP ANTENNA BOARD
****

< FUSE HOLDER >

ANT2 1-533-233-11 HOLDER, FUSE

< CONNECTOR >

* CN6 1-564-704-11 PIN, CONNECTOR (SMALL TYPE) 2P

< TERMINAL >

TB1 1-537-114-11 TERMINAL BOARD

****

* A-3264-584-A MAIN BOARD, COMPLETE (AEP, G)
****

* A-3264-618-A MAIN BOARD, COMPLETE (US, Canadian)
****

* A-3264-619-A MAIN BOARD, COMPLETE (UK)
****

* A-3264-621-A MAIN BOARD, COMPLETE (IT)
****

* 4-902-345-01 HEAT SINK (AEP, UK, G, IT)
* 3-309-144-21 HEAT SINK (US, Canadian)
7-682-547-09 SCREW +BVTT 3X6 (S) (AEP, UK, G, IT)
7-685-647-79 SCREW +BVTP 3X10 TYPE2 IT-3

< CAPACITOR >

C101	1-126-044-11	ELECT	1uF	20%	50V
C102	1-126-043-11	ELECT	0.47uF	20%	50V
C103	1-126-043-11	ELECT	0.47uF	20%	50V
C104	1-126-044-11	ELECT	1uF	20%	50V
C105	1-163-117-00	CERAMIC CHIP	100PF	5%	50V
C106	1-123-369-00	ELECT	4.7uF	20%	25V
C107	1-163-105-00	CERAMIC CHIP	33PF	5%	50V
C109	1-136-165-00	FILM	0.1uF	5%	50V
C110	1-136-165-00	FILM	0.1uF	5%	50V

The components identified by mark ⚠ or dotted line with mark ⚠ are critical for safety. Replace only with part number specified.	Les composants identifiés par une marque ⚠ sont critiques pour la sécurité. Ne les remplacer que par une piéce portant le numéro spécifié.

Ref.No.	Part No.	Description			Remark
C111	1-126-044-11	ELECT	1uF	20%	50V
C112	1-163-009-11	CERAMIC CHIP	0.001uF	10%	50V
C113	1-126-044-11	ELECT	1uF	20%	50V
C114	1-163-117-00	CERAMIC CHIP	100PF	5%	50V
C115	1-124-915-11	ELECT	10uF	20%	63V
C116	1-124-915-11	ELECT	10uF	20%	63V
C117	1-124-910-11	ELECT	47uF	20%	50V
C118	1-136-165-00	FILM	0.1uF	5%	50V
C119	1-136-165-00	FILM	0.1uF	5%	50V
C120	1-126-335-11	ELECT	220uF	20%	10V
C121	1-126-335-11	ELECT	220uF	20%	10V
C122	1-126-044-11	ELECT	1uF	20%	50V
C123	1-163-117-00	CERAMIC CHIP	100PF	5%	50V
C124	1-123-369-00	ELECT	4.7uF	20%	25V
C125	1-163-107-00	CERAMIC CHIP	39PF	5%	50V
C126	1-124-120-11	ELECT	220uF	20%	25V
C127	1-126-157-11	ELECT	10uF	20%	16V
C128	1-124-557-11	ELECT	1000uF	20%	25V
C129	1-126-044-11	ELECT	1uF	20%	50V
C130	1-163-117-00	CERAMIC CHIP	100PF	5%	50V
C131	1-163-037-11	CERAMIC CHIP	0.022uF	10%	25V
C133	1-163-117-00	CERAMIC CHIP	100PF	5%	50V
C134	1-163-117-00	CERAMIC CHIP	100PF	5%	50V
C136	1-126-044-11	ELECT	1uF	20%	50V
C137	1-163-117-00	CERAMIC CHIP	100PF	5%	50V
C150	1-163-009-11	CERAMIC CHIP	0.001uF	10%	50V
C151	1-163-009-11	CERAMIC CHIP	0.001uF	10%	50V
C190	1-163-009-11	CERAMIC CHIP	0.001uF	10%	50V
C201	1-126-044-11	ELECT	1uF	20%	50V
C202	1-126-043-11	ELECT	0.47uF	20%	50V
C203	1-126-043-11	ELECT	0.47uF	20%	50V
C204	1-126-044-11	ELECT	1uF	20%	50V
C205	1-163-117-00	CERAMIC CHIP	100PF	5%	50V
C206	1-123-369-00	ELECT	4.7uF	20%	25V
C207	1-163-105-00	CERAMIC CHIP	33PF	5%	50V
C209	1-136-165-00	FILM	0.1uF	5%	50V
C210	1-136-165-00	FILM	0.1uF	5%	50V
C211	1-126-044-11	ELECT	1uF	20%	50V
C212	1-163-009-11	CERAMIC CHIP	0.001uF	10%	50V
C213	1-126-044-11	ELECT	1uF	20%	50V
C214	1-163-117-00	CERAMIC CHIP	100PF	5%	50V
C215	1-124-915-11	ELECT	10uF	20%	63V
C216	1-124-915-11	ELECT	10uF	20%	63V
C217	1-124-910-11	ELECT	47uF	20%	50V
C218	1-136-165-00	FILM	0.1uF	5%	50V
C219	1-136-165-00	FILM	0.1uF	5%	50V
C220	1-126-335-11	ELECT	220uF	20%	10V
C221	1-126-335-11	ELECT	220uF	20%	10V
C222	1-126-044-11	ELECT	1uF	20%	50V
C223	1-163-117-00	CERAMIC CHIP	100PF	5%	50V
C224	1-123-369-00	ELECT	4.7uF	20%	25V

Ref.No.	Part No.	Description			Remark
C225	1-163-107-00	CERAMIC CHIP	39PF	5%	50V
C226	1-124-120-11	ELECT	220uF	20%	25V
C227	1-126-157-11	ELECT	10uF	20%	16V
C229	1-126-044-11	ELECT	1uF	20%	50V
C230	1-163-117-00	CERAMIC CHIP	100PF	5%	50V
C231	1-163-037-11	CERAMIC CHIP	0.022uF	10%	25V
C233	1-163-117-00	CERAMIC CHIP	100PF	5%	50V
C234	1-163-117-00	CERAMIC CHIP	100PF	5%	50V
C236	1-126-044-11	ELECT	1uF	20%	50V
C237	1-163-117-00	CERAMIC CHIP	100PF	5%	50V
C250	1-163-009-11	CERAMIC CHIP	0.001uF	10%	50V
C251	1-163-009-11	CERAMIC CHIP	0.001uF	10%	50V
C290	1-163-009-11	CERAMIC CHIP	0.001uF	10%	50V
C301	1-126-101-11	ELECT	100uF	20%	16V
C302	1-126-101-11	ELECT	100uF	20%	16V
C304	1-126-101-11	ELECT	100uF	20%	16V
C305	1-126-101-11	ELECT	100uF	20%	16V
C307	1-163-009-11	CERAMIC CHIP	0.001uF	10%	50V
C309	1-126-101-11	ELECT	100uF	20%	16V
C310	1-126-101-11	ELECT	100uF	20%	16V
C312	1-124-902-00	ELECT	0.47uF	20%	50V
C313	1-124-122-11	ELECT	100uF	20%	50V
C314	1-126-101-11	ELECT	100uF	20%	16V
C315	1-124-126-00	ELECT	47uF	20%	10V
C319	1-164-232-11	CERAMIC CHIP	0.01uF		50V
C320	1-124-910-11	ELECT	47uF	20%	50V
C321	1-164-004-11	CERAMIC CHIP	0.1uF	10%	25V
C331	1-163-009-11	CERAMIC CHIP	0.001uF	10%	50V
C802	1-164-232-11	CERAMIC CHIP	0.01uF		50V
C803	1-124-443-00	ELECT	100uF	20%	10V
C804	1-163-235-11	CERAMIC CHIP	22PF	5%	50V
C805	1-163-235-11	CERAMIC CHIP	22PF	5%	50V
C806	1-163-241-11	CERAMIC CHIP	39PF	5%	50V
C807	1-163-241-11	CERAMIC CHIP	39PF	5%	50V
C808	1-163-110-00	CERAMIC CHIP	51PF	5%	50V
C809	1-164-232-11	CERAMIC CHIP	0.01uF		50V
C810	1-124-907-11	ELECT	10uF	20%	50V
C811	1-164-232-11	CERAMIC CHIP	0.01uF		50V
C812	1-164-232-11	CERAMIC CHIP	0.01uF		50V
C813	1-164-232-11	CERAMIC CHIP	0.01uF		50V
C814	1-164-232-11	CERAMIC CHIP	0.01uF		50V
C815	1-164-232-11	CERAMIC CHIP	0.01uF		50V
C816	1-164-232-11	CERAMIC CHIP	0.01uF		50V
C817	1-163-038-00	CERAMIC CHIP	0.1uF		25V
C818	1-164-232-11	CERAMIC CHIP	0.01uF		50V
C819	1-163-038-00	CERAMIC CHIP	0.1uF		25V
C820	1-164-232-11	CERAMIC CHIP	0.01uF		50V
C821	1-163-038-00	CERAMIC CHIP	0.1uF		25V
C823	1-124-903-11	ELECT	1uF	20%	50V
C826	1-163-110-00	CERAMIC CHIP	51PF	5%	50V
C828	1-163-038-00	CERAMIC CHIP	0.1uF		25V

MAIN

Ref. No.	Part No.	Description			Remark
C829	1-163-038-00	CERAMIC CHIP	0.1uF	25V	
C830	1-163-117-00	CERAMIC CHIP	100PF	5% 50V	
C831	1-163-019-00	CERAMIC CHIP	0.0068uF	10% 50V	
C832	1-163-019-00	CERAMIC CHIP	0.0068uF	10% 50V	
C833	1-163-017-00	CERAMIC CHIP	0.0047uF	5% 50V	
C834	1-163-017-00	CERAMIC CHIP	0.0047uF	5% 50V	
C835	1-163-017-00	CERAMIC CHIP	0.0047uF	5% 50V	
C836	1-163-017-00	CERAMIC CHIP	0.0047uF	5% 50V	
C837	1-163-017-00	CERAMIC CHIP	0.0047uF	5% 50V	
C838	1-163-017-00	CERAMIC CHIP	0.0047uF	5% 50V	
C839	1-163-017-00	CERAMIC CHIP	0.0047uF	5% 50V	
C840	1-163-017-00	CERAMIC CHIP	0.0047uF	5% 50V	
C842	1-163-031-11	CERAMIC CHIP	0.01uF	50V	
C843	1-163-031-11	CERAMIC CHIP	0.01uF	50V	
C844	1-163-117-00	CERAMIC CHIP	100PF	5% 50V	
C845	1-163-117-00	CERAMIC CHIP	100PF	5% 50V	
C846	1-163-117-00	CERAMIC CHIP	100PF	5% 50V	
C847	1-163-117-00	CERAMIC CHIP	100PF	5% 50V	
C848	1-163-031-11	CERAMIC CHIP	0.01uF	50V	
C850	1-163-009-11	CERAMIC CHIP	0.001uF	10% 50V	
C851	1-163-031-11	CERAMIC CHIP	0.01uF	50V	
C852	1-161-379-00	CERAMIC	0.01uF	20% 25V	(AEP, G)
C853	1-162-290-31	CERAMIC	470PF	10% 50V	(AEP, UK, G, IT)
C901	1-163-036-00	CERAMIC CHIP	0.068uF	50V	
C902	1-163-036-00	CERAMIC CHIP	0.068uF	50V	
C903	1-163-036-00	CERAMIC CHIP	0.068uF	50V	
C904	1-163-036-00	CERAMIC CHIP	0.068uF	50V	
C906	1-124-902-00	ELECT	0.47uF	20% 50V	
C907	1-126-101-11	ELECT	100uF	20% 16V	
C908	1-126-101-11	ELECT	100uF	20% 16V	
C909	1-123-306-00	ELECT	47uF	20% 10V	
C910	1-164-232-11	CERAMIC CHIP	0.01uF	50V	
C911	1-163-036-00	CERAMIC CHIP	0.068uF	50V	
C912	1-124-120-11	ELECT	220uF	20% 25V	
C913	1-163-038-00	CERAMIC CHIP	0.1uF	25V	
C914	1-163-038-00	CERAMIC CHIP	0.1uF	25V	
C915	1-163-038-00	CERAMIC CHIP	0.1uF	25V	
C917	1-164-346-11	CERAMIC CHIP	1uF	16V	
C922	1-164-232-11	CERAMIC CHIP	0.01uF	50V	
C923	1-124-907-11	ELECT	10uF	20% 50V	
C924	1-164-232-11	CERAMIC CHIP	0.01uF	50V	
C925	1-124-907-11	ELECT	10uF	20% 50V	
C926	1-163-105-00	CERAMIC CHIP	33PF	5% 50V	
C927	1-164-232-11	CERAMIC CHIP	0.01uF	50V	
C928	1-164-232-11	CERAMIC CHIP	0.01uF	50V	
C931	1-165-319-11	CERAMIC CHIP	0.1uF	50V	
C933	1-164-232-11	CERAMIC CHIP	0.01uF	50V	
C934	1-163-009-11	CERAMIC CHIP	0.001uF	10% 50V	
C935	1-163-038-00	CERAMIC CHIP	0.1uF	25V	
C951	1-126-233-11	ELECT	22uF	20% 50V	
C952	1-126-233-11	ELECT	22uF	20% 50V	
		< CONNECTOR >			
* CN101	1-569-973-11	PIN, CONNECTOR (PC BOARD) 2P			
* CN201	1-569-973-11	PIN, CONNECTOR (PC BOARD) 2P			
* CN301	1-564-708-11	PIN, CONNECTOR (SMALL TYPE) 6P			
* CN302	1-569-926-11	SOCKET, CONNECTOR 7P			
* CN801	1-691-610-11	PIN, CONNECTOR (PC BOARD) 20P			
* CN802	1-691-610-11	PIN, CONNECTOR (PC BOARD) 20P			
* CN803	1-569-934-11	SOCKET, CONNECTOR 17P			
* CN804	1-569-918-11	SOCKET, CONNECTOR 26P			
* CN805	1-564-706-11	PIN, CONNECTOR (SMALL TYPE) 4P			
* CN806	1-569-925-11	SOCKET, CONNECTOR 6P			
* CN808	1-750-538-11	HOUSING, CONNECTOR(PC BOARD) 12P			
* CN903	1-580-141-11	PIN, CONNECTOR (PC BOARD) 2P			
* CN904	1-569-925-11	SOCKET, CONNECTOR 6P			
		< DIODE >			
D304	8-719-400-18	DIODE	MA152WK		
D309	8-719-400-18	DIODE	MA152WK		
D801	8-719-400-18	DIODE	MA152WK		
D802	8-719-400-18	DIODE	MA152WK		
D903	8-719-400-18	DIODE	MA152WK		
D905	8-719-400-18	DIODE	MA152WK		
D906	8-719-114-66	DIODE	RD27M-B		
D909	8-719-400-18	DIODE	MA152WK		
D911	8-719-043-52	DIODE	F5KQ60		
D912	8-719-043-52	DIODE	F5KQ60		
D913	8-719-043-52	DIODE	F5KQ60		
D914	8-719-043-52	DIODE	F5KQ60		
		< FUSE >			
⚠F901	1-576-193-11	FUSE (US, Canadian)			
⚠F901	1-532-506-51	FUSE (AEP, UK, G, IT)			
		< FUSE HOLDER >			
FH901	1-533-233-11	HOLDER, FUSE			
FH902	1-533-233-11	HOLDER, FUSE			
		< IC >			
IC101	8-759-178-19	IC	uPC2505H		
IC201	8-759-178-19	IC	uPC2505H		
IC301	8-759-516-41	IC	CD4052BCM		
IC302	8-759-710-55	IC	NJM2100M		
IC303	8-759-636-55	IC	M5218AFP		
IC304	8-759-604-78	IC	M5216FP		
IC801	8-752-844-89	IC	CXP84120-010Q		
IC802	8-759-511-42	IC	S-80730AN		
IC803	8-759-242-29	IC	TC74HC4514AP		
IC804	8-749-923-04	IC	TOTX178		

The components identified by mark ⚠ or dotted line with mark ⚠ are critical for safety. Replace only with part number specified.	Les composants identifiés par une marque ⚠ sont critiques pour la sécurité. Ne les remplacer que par une piéce portant le numéro spécifié.

Ref. No.	Part No.	Description	Remark
IC805	8-749-923-05	IC TORX178	
IC806	8-759-234-20	IC TC7S08F	
IC901	8-759-513-10	IC BA3924-V3	
IC902	8-759-912-55	IC S-81250HG	
IC903	8-759-912-55	IC S-81250HG	
		< JACK >	
J301	1-566-822-21	JACK	
J302	1-566-822-21	JACK	
		< JUMPER RESISTOR >	
JR1	1-216-295-00	METAL CHIP 0 5% 1/10W	
JR2	1-216-295-00	METAL CHIP 0 5% 1/10W	
JR3	1-216-295-00	METAL CHIP 0 5% 1/10W	
JR4	1-216-295-00	METAL CHIP 0 5% 1/10W	
JR5	1-216-296-00	METAL CHIP 0 5% 1/8W	
JR10	1-216-295-00	METAL CHIP 0 5% 1/10W	
JR701	1-216-295-00	METAL CHIP 0 5% 1/10W	
JR702	1-216-295-00	METAL CHIP 0 5% 1/10W	
		< COIL >	
L101	1-414-278-11	INDUCTOR 0uH	
L102	1-414-278-11	INDUCTOR 0uH	
L201	1-414-278-11	INDUCTOR 0uH	
L202	1-414-278-11	INDUCTOR 0uH	
L301	1-402-984-11	FILTER, COMMON MODE	
L302	1-402-984-11	FILTER, COMMON MODE	
L510	1-414-278-11	INDUCTOR 0uH	
L520	1-414-278-11	INDUCTOR 0uH	
L801	1-412-860-11	INDUCTOR 220uH	
L802	1-410-312-11	INDUCTOR 0.22uH	
L803	1-412-006-31	INDUCTOR CHIP 10uH	
L804	1-412-006-31	INDUCTOR CHIP 10uH	
L805	1-412-006-31	INDUCTOR CHIP 10uH	
L806	1-410-389-31	INDUCTOR CHIP 47uH	
L807	1-410-971-11	INDUCTOR 10uH	
L808	1-410-971-11	INDUCTOR 10uH	
L809	1-412-006-31	INDUCTOR CHIP 10uH	
L901	1-410-977-11	INDUCTOR 100uH	
L902	1-410-971-11	INDUCTOR 10uH	
L903	1-410-389-31	INDUCTOR CHIP 47uH	
		< IC LINK >	
⚠PS901	1-576-123-21	LINK, IC	
		< TRANSISTOR >	
Q101	8-729-120-28	TRANSISTOR 2SC1623-L5L6	
Q102	8-729-424-67	TRANSISTOR UN2216	
Q103	8-729-424-67	TRANSISTOR UN2216	
Q104	8-729-424-67	TRANSISTOR UN2216 (AEP, UK, G, IT)	
Q106	8-729-424-67	TRANSISTOR UN2216	
Q107	8-729-120-28	TRANSISTOR 2SC1623-L5L6	
Q108	8-729-920-31	TRANSISTOR DTC343TK	
Q111	8-729-920-31	TRANSISTOR DTC343TK	
Q201	8-729-120-28	TRANSISTOR 2SC1623-L5L6	
Q202	8-729-424-67	TRANSISTOR UN2216	
Q203	8-729-424-67	TRANSISTOR UN2216	
Q204	8-729-424-67	TRANSISTOR UN2216 (AEP, UK, G, IT)	
Q206	8-729-424-67	TRANSISTOR UN2216	
Q207	8-729-120-28	TRANSISTOR 2SC1623-L5L6	
Q208	8-729-920-31	TRANSISTOR DTC343TK	
Q211	8-729-920-31	TRANSISTOR DTC343TK	
Q301	8-729-901-46	TRANSISTOR DTA114YK	
Q302	8-729-900-52	TRANSISTOR DTC114YK	
Q303	8-729-900-52	TRANSISTOR DTC114YK	
Q305	8-729-424-81	TRANSISTOR UN221E	
Q306	8-729-120-28	TRANSISTOR 2SC1623-L5L6	
Q307	8-729-900-52	TRANSISTOR DTC114YK	
Q308	8-729-901-46	TRANSISTOR DTA114YK	
Q801	8-729-120-28	TRANSISTOR 2SC1623-L5L6	
Q802	8-729-901-46	TRANSISTOR DTA114YK	
Q805	8-729-920-31	TRANSISTOR DTC343TK	
Q806	8-729-920-31	TRANSISTOR DTC343TK	
Q807	8-729-920-31	TRANSISTOR DTC343TK	
Q808	8-729-920-31	TRANSISTOR DTC343TK	
Q809	8-729-920-31	TRANSISTOR DTC343TK	
Q810	8-729-920-31	TRANSISTOR DTC343TK	
Q811	8-729-920-31	TRANSISTOR DTC343TK	
Q812	8-729-920-31	TRANSISTOR DTC343TK	
Q818	8-729-920-31	TRANSISTOR DTC343TK	
Q819	8-729-920-31	TRANSISTOR DTC343TK	
Q820	8-729-920-31	TRANSISTOR DTC343TK	
Q822	8-729-901-46	TRANSISTOR DTA114YK	
Q823	8-729-900-52	TRANSISTOR DTC114YK	
Q824	8-729-900-52	TRANSISTOR DTC114YK	
Q826	8-729-120-28	TRANSISTOR 2SC1623-L5L6	
Q829	8-729-900-52	TRANSISTOR DTC114YK	
Q901	8-729-924-90	TRANSISTOR 2SB1370-EF	
Q904	8-729-120-28	TRANSISTOR 2SC1623-L5L6	
Q905	8-729-120-28	TRANSISTOR 2SC1623-L5L6	
Q906	8-729-901-46	TRANSISTOR DTA114YK	
Q907	8-729-900-52	TRANSISTOR DTC114YK	
		< RESISTOR >	
R101	1-216-089-00	METAL CHIP 47K 5% 1/10W	
R102	1-216-064-00	METAL CHIP 4.3K 5% 1/10W	
R103	1-216-073-00	METAL CHIP 10K 5% 1/10W	
R104	1-216-063-00	METAL CHIP 3.9K 5% 1/10W	
R105	1-216-075-00	METAL CHIP 12K 5% 1/10W	
R106	1-216-105-00	METAL CHIP 220K 5% 1/10W	
R107	1-216-062-00	METAL CHIP 3.6K 5% 1/10W	

The components identified by mark ⚠ or dotted line with mark ⚠ are critical for safety. Replace only with part number specified.	Les composants identifiés par une marque ⚠ sont critiques pour la sécurité. Ne les remplacer que par une piéce portant le numéro spécifié.

MAIN

Ref.No.	Part No.	Description				Remark
R108	1-216-089-00	METAL CHIP	47K	5%	1/10W	
R109	1-216-049-00	METAL CHIP	1K	5%	1/10W	
R110	1-216-080-00	METAL CHIP	20K	5%	1/10W	
R111	1-216-053-00	METAL CHIP	1.5K	5%	1/10W	
R112	1-216-099-00	METAL CHIP	120K	5%	1/10W	
R113	1-216-049-00	METAL CHIP	1K	5%	1/10W	
R114	1-216-065-00	METAL CHIP	4.7K	5%	1/10W	
R115	1-216-064-00	METAL CHIP	4.3K	5%	1/10W	
R116	1-216-085-00	METAL CHIP	33K	5%	1/10W	
R117	1-216-121-00	METAL CHIP	1M	5%	1/10W	
R118	1-216-049-00	METAL CHIP	1K	5%	1/10W	
R119	1-216-099-00	METAL CHIP	120K	5%	1/10W	
R120	1-216-049-00	METAL CHIP	1K	5%	1/10W	
R121	1-216-090-00	METAL CHIP	51K	5%	1/10W	
R122	1-216-009-00	METAL CHIP	22	5%	1/10W	
R123	1-216-009-00	METAL CHIP	22	5%	1/10W	
R124	1-216-053-00	METAL CHIP	1.5K	5%	1/10W	
R125	1-216-053-00	METAL CHIP	1.5K	5%	1/10W	
R126	1-249-381-11	CARBON	1	5%	1/4W	F
R127	1-249-381-11	CARBON	1	5%	1/4W	F
R128	1-216-049-00	METAL CHIP	1K	5%	1/10W	
R129	1-216-082-00	METAL GLAZE	24K	5%	1/10W	
R130	1-216-013-00	METAL CHIP	33	5%	1/10W	
R131	1-216-097-00	METAL CHIP	100K	5%	1/10W	
R132	1-216-049-00	METAL CHIP	1K	5%	1/10W	
R133	1-216-105-00	METAL CHIP	220K	5%	1/10W	
R134	1-216-042-00	METAL CHIP	510	5%	1/10W	
R137	1-216-295-00	METAL CHIP	0	5%	1/10W	
R139	1-216-064-00	METAL CHIP	4.3K	5%	1/10W	
R140	1-216-085-00	METAL CHIP	33K	5%	1/10W	
R141	1-216-049-00	METAL CHIP	1K	5%	1/10W	
R201	1-216-089-00	METAL CHIP	47K	5%	1/10W	
R202	1-216-064-00	METAL CHIP	4.3K	5%	1/10W	
R203	1-216-073-00	METAL CHIP	10K	5%	1/10W	
R204	1-216-063-00	METAL CHIP	3.9K	5%	1/10W	
R205	1-216-075-00	METAL CHIP	12K	5%	1/10W	
R206	1-216-105-00	METAL CHIP	220K	5%	1/10W	
R207	1-216-062-00	METAL CHIP	3.6K	5%	1/10W	
R208	1-216-089-00	METAL CHIP	47K	5%	1/10W	
R209	1-216-049-00	METAL CHIP	1K	5%	1/10W	
R210	1-216-080-00	METAL CHIP	20K	5%	1/10W	
R211	1-216-053-00	METAL CHIP	1.5K	5%	1/10W	
R212	1-216-099-00	METAL CHIP	120K	5%	1/10W	
R213	1-216-049-00	METAL CHIP	1K	5%	1/10W	
R214	1-216-065-00	METAL CHIP	4.7K	5%	1/10W	
R215	1-216-064-00	METAL CHIP	4.3K	5%	1/10W	
R216	1-216-085-00	METAL CHIP	33K	5%	1/10W	
R217	1-216-121-00	METAL CHIP	1M	5%	1/10W	
R218	1-216-049-00	METAL CHIP	1K	5%	1/10W	
R219	1-216-099-00	METAL CHIP	120K	5%	1/10W	
R220	1-216-049-00	METAL CHIP	1K	5%	1/10W	
R221	1-216-090-00	METAL CHIP	51K	5%	1/10W	
R222	1-216-009-00	METAL CHIP	22	5%	1/10W	
R223	1-216-009-00	METAL CHIP	22	5%	1/10W	
R224	1-216-053-00	METAL CHIP	1.5K	5%	1/10W	
R225	1-216-053-00	METAL CHIP	1.5K	5%	1/10W	
R226	1-249-381-11	CARBON	1	5%	1/4W	F
R227	1-249-381-11	CARBON	1	5%	1/4W	F
R228	1-216-049-00	METAL CHIP	1K	5%	1/10W	
R229	1-216-082-00	METAL GLAZE	24K	5%	1/10W	
R230	1-216-013-00	METAL CHIP	33	5%	1/10W	
R231	1-216-097-00	METAL CHIP	100K	5%	1/10W	
R232	1-216-049-00	METAL CHIP	1K	5%	1/10W	
R233	1-216-105-00	METAL CHIP	220K	5%	1/10W	
R234	1-216-042-00	METAL CHIP	510	5%	1/10W	
R237	1-216-295-00	METAL CHIP	0	5%	1/10W	
R239	1-216-064-00	METAL CHIP	4.3K	5%	1/10W	
R240	1-216-085-00	METAL CHIP	33K	5%	1/10W	
R241	1-216-049-00	METAL CHIP	1K	5%	1/10W	
R301	1-216-025-00	METAL CHIP	100	5%	1/10W	
R302	1-216-025-00	METAL CHIP	100	5%	1/10W	
R303	1-216-025-00	METAL CHIP	100	5%	1/10W	
R304	1-216-073-00	METAL CHIP	10K	5%	1/10W	
R305	1-216-073-00	METAL CHIP	10K	5%	1/10W	
R307	1-216-073-00	METAL CHIP	10K	5%	1/10W	
R308	1-216-073-00	METAL CHIP	10K	5%	1/10W	
R309	1-216-049-00	METAL CHIP	1K	5%	1/10W	
R310	1-216-097-00	METAL CHIP	100K	5%	1/10W	
R311	1-216-121-00	METAL CHIP	1M	5%	1/10W	
R312	1-216-025-00	METAL CHIP	100	5%	1/10W	
R314	1-216-025-00	METAL CHIP	100	5%	1/10W	
R316	1-216-097-00	METAL CHIP	100K	5%	1/10W	
R317	1-216-097-00	METAL CHIP	100K	5%	1/10W	
R318	1-216-295-00	METAL CHIP	0	5%	1/10W	
R319	1-216-049-00	METAL CHIP	1K	5%	1/10W	
R320	1-216-049-00	METAL CHIP	1K	5%	1/10W	
R324	1-216-073-00	METAL CHIP	10K	5%	1/10W	
R325	1-216-073-00	METAL CHIP	10K	5%	1/10W	
R330	1-216-073-00	METAL CHIP	10K	5%	1/10W	
R331	1-216-077-00	METAL CHIP	15K	5%	1/10W	
R801	1-216-049-00	METAL CHIP	1K	5%	1/10W	
R802	1-216-049-00	METAL CHIP	1K	5%	1/10W	
R803	1-216-049-00	METAL CHIP	1K	5%	1/10W	
R804	1-216-049-00	METAL CHIP	1K	5%	1/10W	
R805	1-216-049-00	METAL CHIP	1K	5%	1/10W	
R806	1-216-049-00	METAL CHIP	1K	5%	1/10W	
R807	1-216-049-00	METAL CHIP	1K	5%	1/10W	
R808	1-216-049-00	METAL CHIP	1K	5%	1/10W	
R812	1-216-073-00	METAL CHIP	10K	5%	1/10W	
R813	1-216-073-00	METAL CHIP	10K	5%	1/10W	

Ref. No.	Part No.	Description				Remark
R814	1-216-049-00	METAL CHIP	1K	5%	1/10W	
R815	1-216-073-00	METAL CHIP	10K	5%	1/10W	
R816	1-216-073-00	METAL CHIP	10K	5%	1/10W	
R817	1-216-073-00	METAL CHIP	10K	5%	1/10W	
R818	1-216-073-00	METAL CHIP	10K	5%	1/10W	
R819	1-216-073-00	METAL CHIP	10K	5%	1/10W	
R820	1-216-073-00	METAL CHIP	10K	5%	1/10W	
R821	1-216-073-00	METAL CHIP	10K	5%	1/10W	
R822	1-216-073-00	METAL CHIP	10K	5%	1/10W	
R823	1-216-073-00	METAL CHIP	10K	5%	1/10W	
R824	1-216-073-00	METAL CHIP	10K	5%	1/10W	
R825	1-216-073-00	METAL CHIP	10K	5%	1/10W	
R826	1-216-073-00	METAL CHIP	10K	5%	1/10W	
R827	1-216-073-00	METAL CHIP	10K	5%	1/10W	
R828	1-216-073-00	METAL CHIP	10K	5%	1/10W	
R829	1-216-073-00	METAL CHIP	10K	5%	1/10W	
R830	1-216-065-00	METAL CHIP	4.7K	5%	1/10W	
R831	1-216-073-00	METAL CHIP	10K	5%	1/10W	
R832	1-216-073-00	METAL CHIP	10K	5%	1/10W	
R833	1-216-073-00	METAL CHIP	10K	5%	1/10W	
R834	1-216-073-00	METAL CHIP	10K	5%	1/10W	
R835	1-216-073-00	METAL CHIP	10K	5%	1/10W	
R836	1-216-073-00	METAL CHIP	10K	5%	1/10W	
R837	1-216-073-00	METAL CHIP	10K	5%	1/10W	
R838	1-216-073-00	METAL CHIP	10K	5%	1/10W	
R839	1-216-073-00	METAL CHIP	10K	5%	1/10W	
R840	1-216-073-00	METAL CHIP	10K	5%	1/10W	
R841	1-216-073-00	METAL CHIP	10K	5%	1/10W	
R842	1-216-073-00	METAL CHIP	10K	5%	1/10W	
R843	1-216-073-00	METAL CHIP	10K	5%	1/10W	
R844	1-216-073-00	METAL CHIP	10K	5%	1/10W	
R845	1-216-073-00	METAL CHIP	10K	5%	1/10W	
R846	1-216-073-00	METAL CHIP	10K	5%	1/10W	
R847	1-216-073-00	METAL CHIP	10K	5%	1/10W	
R848	1-216-073-00	METAL CHIP	10K	5%	1/10W	
R849	1-216-073-00	METAL CHIP	10K	5%	1/10W	
R850	1-216-073-00	METAL CHIP	10K	5%	1/10W	
R851	1-216-073-00	METAL CHIP	10K	5%	1/10W	
R852	1-216-073-00	METAL CHIP	10K	5%	1/10W	
R853	1-216-073-00	METAL CHIP	10K	5%	1/10W	
R854	1-216-049-00	METAL CHIP	1K	5%	1/10W	
R855	1-216-073-00	METAL CHIP	10K	5%	1/10W	
R856	1-216-073-00	METAL CHIP	10K	5%	1/10W	
R857	1-216-097-00	METAL CHIP	100K	5%	1/10W	(AEP, UK, G, IT)
R858	1-216-097-00	METAL CHIP	100K	5%	1/10W	(AEP, UK, G, IT)
R859	1-216-073-00	METAL CHIP	10K	5%	1/10W	
R861	1-216-049-00	METAL CHIP	1K	5%	1/10W	
R862	1-216-049-00	METAL CHIP	1K	5%	1/10W	
R863	1-216-049-00	METAL CHIP	1K	5%	1/10W	
R864	1-216-049-00	METAL CHIP	1K	5%	1/10W	
R865	1-216-089-00	METAL CHIP	47K	5%	1/10W	
R866	1-216-025-00	METAL CHIP	100	5%	1/10W	
R867	1-216-053-00	METAL CHIP	1.5K	5%	1/10W	
R868	1-216-065-00	METAL CHIP	4.7K	5%	1/10W	
R869	1-216-073-00	METAL CHIP	10K	5%	1/10W	
R870	1-216-634-11	METAL CHIP	200	0.5%	1/10W	
R871	1-216-635-11	METAL CHIP	220	0.5%	1/10W	
R872	1-216-637-11	METAL CHIP	270	0.5%	1/10W	
R873	1-216-639-11	METAL CHIP	330	0.5%	1/10W	
R874	1-216-642-11	METAL CHIP	430	0.5%	1/10W	
R875	1-216-644-11	METAL CHIP	510	0.5%	1/10W	
R876	1-216-646-11	METAL CHIP	620	0.5%	1/10W	
R877	1-216-295-00	METAL CHIP	0	5%	1/10W	
R879	1-216-065-00	METAL CHIP	4.7K	5%	1/10W	
R881	1-216-635-11	METAL CHIP	220	0.5%	1/10W	
R882	1-216-637-11	METAL CHIP	270	0.5%	1/10W	
R883	1-216-057-00	METAL CHIP	2.2K	5%	1/10W	
R884	1-216-089-00	METAL CHIP	47K	5%	1/10W	
R885	1-216-089-00	METAL CHIP	47K	5%	1/10W	
R886	1-216-089-00	METAL CHIP	47K	5%	1/10W	
R887	1-216-089-00	METAL CHIP	47K	5%	1/10W	
R888	1-216-089-00	METAL CHIP	47K	5%	1/10W	
R889	1-216-089-00	METAL CHIP	47K	5%	1/10W	
R890	1-216-089-00	METAL CHIP	47K	5%	1/10W	
R891	1-216-089-00	METAL CHIP	47K	5%	1/10W	
R892	1-216-089-00	METAL CHIP	47K	5%	1/10W	
R893	1-216-089-00	METAL CHIP	47K	5%	1/10W	
R894	1-216-089-00	METAL CHIP	47K	5%	1/10W	
R895	1-216-295-00	METAL CHIP	0	5%	1/10W	(US, Canadian)
R896	1-216-295-00	METAL CHIP	0	5%	1/10W	(US, Canadian)
R901	1-216-089-00	METAL CHIP	47K	5%	1/10W	
R904	1-216-095-00	METAL CHIP	82K	5%	1/10W	
R905	1-216-049-00	METAL CHIP	1K	5%	1/10W	
R906	1-216-097-00	METAL CHIP	100K	5%	1/10W	
R907	1-216-089-00	METAL CHIP	47K	5%	1/10W	
R908	1-216-065-00	METAL CHIP	4.7K	5%	1/10W	
R909	1-216-073-00	METAL CHIP	10K	5%	1/10W	
R910	1-216-073-00	METAL CHIP	10K	5%	1/10W	
R911	1-216-105-00	METAL CHIP	220K	5%	1/10W	
R912	1-216-049-00	METAL CHIP	1K	5%	1/10W	
R913	1-216-049-00	METAL CHIP	1K	5%	1/10W	
R914	1-216-073-00	METAL CHIP	10K	5%	1/10W	
R915	1-216-049-00	METAL CHIP	1K	5%	1/10W	
R916	1-216-049-00	METAL CHIP	1K	5%	1/10W	
R917	1-216-049-00	METAL CHIP	1K	5%	1/10W	
R919	1-216-105-00	METAL CHIP	220K	5%	1/10W	
R920	1-216-105-00	METAL CHIP	220K	5%	1/10W	

MAIN | MD POWER | POWER SW | RADIO

Ref. No.	Part No.	Description	Remark
R921	1-216-105-00	METAL CHIP 220K 5% 1/10W	
R922	1-216-105-00	METAL CHIP 220K 5% 1/10W	
R923	1-216-097-00	METAL CHIP 100K 5% 1/10W	
		< TRANSFORMER >	
⚠T903	1-450-126-11	TRANSFORMER, DC-DC CONVERTER	
		< VIBRATOR >	
X801	1-567-098-00	OSCILLATOR, CRYSTAL (4.8MHz)	
X802	1-579-901-11	OSCILLATOR, CERAMIC (32.76kHz)	
**********			
*	1-648-327-11	MD POWER BOARD	
		**********	
		< DIODE >	
D902	8-719-974-59	DIODE 1SR139-100	
		< IC >	
IC904	8-759-231-53	IC M5F7805	
		< LINE FILTER >	
LF902	1-402-951-11	COIL, LINE FILTER	
**********			
*	1-648-325-11	POWER SW BOARD	
		**********	
		< DIODE >	
D910	8-719-400-18	DIODE MA152WK	
		< TRANSISTOR >	
Q908	8-729-901-46	TRANSISTOR DTA114YK	
Q909	8-729-900-52	TRANSISTOR DTC114YK	
**********			
*	A-3264-583-A	RADIO BOARD, COMPLETE (AEP, UK, G, IT)	
		**********	
*	A-3264-785-A	RADIO BOARD, COMPLETE (US, Canadian)	
		**********	
		< CAPACITOR >	
C1	1-102-945-00	CERAMIC 8.0PF +-0.5PF 50V	
C2	1-163-009-11	CERAMIC CHIP 0.001uF 10% 50V	
C3	1-163-031-11	CERAMIC CHIP 0.01uF 50V	
C4	1-163-009-11	CERAMIC CHIP 0.001uF 10% 50V	
C5	1-163-088-00	CERAMIC CHIP 5PF 50V	
C6	1-163-009-11	CERAMIC CHIP 0.001uF 10% 50V	
C7	1-163-087-00	CERAMIC CHIP 4PF 50V	
C8	1-163-038-00	CERAMIC CHIP 0.1uF 25V	
C9	1-164-232-11	CERAMIC CHIP 0.01uF 50V	
C10	1-163-031-11	CERAMIC CHIP 0.01uF 50V	
C11	1-164-232-11	CERAMIC CHIP 0.01uF 50V	
C12	1-163-141-00	CERAMIC CHIP 0.001uF 5% 50V	
C13	1-124-126-00	ELECT 47uF 20% 10V	
C14	1-164-345-11	CERAMIC CHIP 0.082uF 10% 25V	
C15	1-164-344-11	CERAMIC CHIP 0.068uF 10% 25V	
C16	1-124-903-11	ELECT 1uF 20% 50V	
C17	1-164-345-11	CERAMIC CHIP 0.082uF 10% 25V	
C18	1-163-031-11	CERAMIC CHIP 0.01uF 50V	
C19	1-163-031-11	CERAMIC CHIP 0.01uF 50V	
C20	1-124-903-11	ELECT 1uF 20% 50V	
C21	1-124-907-11	ELECT 10uF 20% 50V	
C22	1-163-037-11	CERAMIC CHIP 0.022uF 10% 25V	
C23	1-124-443-00	ELECT 100uF 20% 10V	
C24	1-163-031-11	CERAMIC CHIP 0.01uF 50V	
C25	1-102-824-00	CERAMIC 470PF 5% 50V	
C26	1-163-235-11	CERAMIC CHIP 22PF 5% 50V	
C27	1-161-021-11	CERAMIC 0.047uF 10% 25V	
C28	1-164-096-11	CERAMIC 0.01uF 50V	
C29	1-164-088-11	CERAMIC 0.001uF 50V	
C30	1-102-951-00	CERAMIC 15PF 5% 50V	
C31	1-162-827-11	CERAMIC 0.001uF 10% 16V	
C32	1-163-009-11	CERAMIC CHIP 0.001uF 10% 50V	
C33	1-163-031-11	CERAMIC CHIP 0.01uF 50V	
C34	1-163-099-00	CERAMIC CHIP 18PF 5% 50V	
C35	1-163-099-00	CERAMIC CHIP 18PF 5% 50V	
C36	1-124-907-11	ELECT 10uF 20% 50V	
C37	1-163-031-11	CERAMIC CHIP 0.01uF 50V	
C38	1-163-117-00	CERAMIC CHIP 100PF 5% 50V	
C39	1-163-117-00	CERAMIC CHIP 100PF 5% 50V	
C40	1-163-117-00	CERAMIC CHIP 100PF 5% 50V	
C41	1-163-009-11	CERAMIC CHIP 0.001uF 10% 50V	
C42	1-136-177-00	FILM 1uF 5% 50V	
C43	1-130-483-00	MYLAR 0.01uF 5% 50V	
C44	1-164-232-11	CERAMIC CHIP 0.01uF 50V	
C45	1-164-232-11	CERAMIC CHIP 0.01uF 50V	
C48	1-162-839-11	CERAMIC 0.01uF 10% 16V	
C49	1-163-117-00	CERAMIC CHIP 100PF 5% 50V	
C50	1-163-024-00	CERAMIC CHIP 0.018uF 10% 50V	
C51	1-124-902-00	ELECT 0.47uF 20% 50V	
C52	1-163-024-00	CERAMIC CHIP 0.018uF 10% 50V	
C53	1-124-902-00	ELECT 0.47uF 20% 50V	
C54	1-163-031-11	CERAMIC CHIP 0.01uF 50V	
C55	1-124-907-11	ELECT 10uF 20% 50V	
C68	1-163-117-00	CERAMIC CHIP 100PF 5% 50V	
C69	1-124-927-11	ELECT 4.7uF 20% 100V	

The components identified by mark ⚠ or dotted line with mark ⚠ are critical for safety. Replace only with part number specified.	Les composants identifiés par une marque ⚠ sont critiques pour la sécurité. Ne les remplacer que par une piéce portant le numéro spécifié.

Ref.No.	Part No.	Description			Remark
C70	1-124-903-11	ELECT	1uF	20%	50V
C71	1-124-443-00	ELECT	100uF	20%	10V
C72	1-124-907-11	ELECT	10uF	20%	50V
C73	1-163-009-11	CERAMIC CHIP	0.001uF	10%	50V
C74	1-163-117-00	CERAMIC CHIP	100PF	5%	50V
C77	1-163-109-00	CERAMIC CHIP	47PF	5%	50V
C78	1-164-232-11	CERAMIC CHIP	0.01uF		50V
C79	1-164-232-11	CERAMIC CHIP	0.01uF		50V
C81	1-163-009-11	CERAMIC CHIP	0.001uF	10%	50V
C82	1-164-232-11	CERAMIC CHIP	0.01uF		50V
C83	1-163-059-00	CERAMIC CHIP	0.01uF	10%	50V
C84	1-164-232-11	CERAMIC CHIP	0.01uF		50V
		< FILTER >			
CF1	1-578-781-11	FILTER, CERAMIC (US, Canadian)			
CF2	1-578-781-11	FILTER, CERAMIC (US, Canadian)			
CF3	1-578-781-11	FILTER, CERAMIC (US, Canadian)			
CF4	1-578-779-21	VIBRATOR, CERAMIC			
		< COMPOSITION CIRCUIT BLOCK >			
CFT1	1-239-173-11	ENCAPSULATED COMPONENT			
		< CONNECTOR >			
* CN1	1-569-934-11	SOCKET, CONNECTOR 17P			
		< TRIMMER >			
CT1	1-141-411-11	CAP, ADJ 20PF			
CT2	1-141-411-11	CAP, ADJ 20PF			
		< DIODE >			
D1	8-719-800-76	DIODE 1SS226			
D2	8-719-026-23	DIODE MA786			
D5	8-719-980-71	DIODE SVC342L-V			
D7	8-713-300-57	DIODE 1T33			
D8	8-713-300-57	DIODE 1T33			
		< FLUORESCENT INDICATOR >			
FL1	1-236-711-21	FILTER, BAND PASS			
		< IC >			
IC1	8-759-242-89	IC TA2012N			
IC2	8-759-823-81	IC LC7216M			
IC3	8-759-039-95	IC TA8176SN			
		< COIL >			
L1	1-406-483-11	COIL (OSC)			
L3	1-406-770-11	COIL, RF			
L6	1-406-484-21	COIL (OSC)			
L11	1-410-977-11	INDUCTOR	100uH		
L13	1-410-971-11	INDUCTOR	10uH		
L14	1-410-971-11	INDUCTOR	10uH		
L21	1-410-204-31	INDUCTOR CHIP	10uH		
		< TRANSISTOR >			
Q1	8-729-920-38	TRANSISTOR 2SC2059K-N			
Q4	8-729-424-38	TRANSISTOR UN2110			
Q5	8-729-900-51	TRANSISTOR DTA114TK			
Q6	8-729-424-38	TRANSISTOR UN2110			
Q7	8-729-920-31	TRANSISTOR DTC343TK			
Q8	8-729-012-83	TRANSISTOR 2SK679A			
Q11	8-729-900-52	TRANSISTOR DTC114YK			
Q13	8-729-923-73	TRANSISTOR DTA123YK			
Q14	8-729-900-52	TRANSISTOR DTC114YK			
Q15	8-729-923-65	TRANSISTOR DTA143ZK			
Q16	8-729-900-52	TRANSISTOR DTC114YK			
Q17	8-729-923-73	TRANSISTOR DTA123YK			
Q18	8-729-421-19	TRANSISTOR UN2213			
Q19	8-729-923-73	TRANSISTOR DTA123YK			
Q21	8-729-920-31	TRANSISTOR DTC343TK			
Q22	8-729-920-31	TRANSISTOR DTC343TK			
		< RESISTOR >			
R1	1-216-049-00	METAL CHIP	1K	5%	1/10W
R2	1-216-021-00	METAL CHIP	68	5%	1/10W
R3	1-216-057-00	METAL CHIP	2.2K	5%	1/10W
R4	1-216-089-00	METAL CHIP	47K	5%	1/10W
R5	1-216-077-00	METAL CHIP	15K	5%	1/10W
R6	1-216-013-00	METAL CHIP	33	5%	1/10W
R7	1-216-077-00	METAL CHIP	15K	5%	1/10W
R8	1-216-081-00	METAL CHIP	22K	5%	1/10W
R9	1-216-035-00	METAL CHIP	270	5%	1/10W
R10	1-216-073-00	METAL CHIP	10K	5%	1/10W
R11	1-216-073-00	METAL CHIP	10K	5%	1/10W
R12	1-216-089-00	METAL CHIP	47K	5%	1/10W
R13	1-249-395-11	CARBON	15	5%	1/4W F
R14	1-216-073-00	METAL CHIP	10K	5%	1/10W
R15	1-216-033-00	METAL CHIP	220	5%	1/10W
R17	1-216-089-00	METAL CHIP	47K	5%	1/10W
R18	1-216-027-00	METAL CHIP	120	5%	1/10W
R19	1-216-037-00	METAL CHIP	330	5%	1/10W
R20	1-216-089-00	METAL CHIP	47K	5%	1/10W
R21	1-216-021-00	METAL CHIP	68	5%	1/10W
R22	1-216-075-00	METAL CHIP	12K	5%	1/10W
R23	1-216-083-00	METAL CHIP	27K	5%	1/10W
R24	1-216-065-00	METAL CHIP	4.7K	5%	1/10W
R25	1-216-073-00	METAL CHIP	10K	5%	1/10W
R26	1-216-073-00	METAL CHIP	10K	5%	1/10W
R27	1-216-073-00	METAL CHIP	10K	5%	1/10W
R28	1-216-049-00	METAL CHIP	1K	5%	1/10W
R29	1-216-049-00	METAL CHIP	1K	5%	1/10W

RADIO RELAY VOLUME CLV (MD)

Ref.No.	Part No.	Description				Remark
R30	1-216-049-00	METAL CHIP	1K	5%	1/10W	
R31	1-216-049-00	METAL CHIP	1K	5%	1/10W	
R32	1-216-077-00	METAL CHIP	15K	5%	1/10W	
R33	1-216-073-00	METAL CHIP	10K	5%	1/10W	
R34	1-216-073-00	METAL CHIP	10K	5%	1/10W	
R37	1-216-025-00	METAL CHIP	100	5%	1/10W	
R41	1-216-073-00	METAL CHIP	10K	5%	1/10W	
R42	1-216-089-00	METAL CHIP	47K	5%	1/10W	
R43	1-216-049-00	METAL CHIP	1K	5%	1/10W	
R45	1-216-089-00	METAL CHIP	47K	5%	1/10W	
R46	1-216-689-11	METAL CHIP	39K	0.5%	1/10W	
R47	1-216-025-00	METAL CHIP	100	5%	1/10W	
R48	1-216-017-00	METAL CHIP	47	5%	1/10W	
R51	1-216-025-00	METAL CHIP	100	5%	1/10W	
R52	1-216-057-00	METAL CHIP	2.2K	5%	1/10W	
R53	1-216-295-00	METAL CHIP	0	5%	1/10W	
		< TRANSFORMER >				
T1	1-416-015-21	TRANSFORMER, IF				
		< TEST PIN >				
TP1	1-536-354-00	POST PIN (US, Canadian)				
		< VIBRATOR >				
X1	1-579-574-21	VIBRATOR, CRYSTAL (7.2MHz)				
**********						
*	1-647-781-21	RELAY BOARD, COMPLETE				
		**********				
		< CONNECTOR >				
* CN551	1-564-718-11	PIN, CONNECTOR (SMALL TYPE) 2P				
* CN552	1-569-900-11	SOCKET, CONNECTOR 4P				
**********						
*	1-649-640-11	VOLUME BOARD				
		**********				
		< CAPACITOR >				
C401	1-124-584-00	ELECT	100uF	20%	10V	
C402	1-163-038-00	CERAMIC CHIP	0.1uF		25V	
C403	1-163-038-00	CERAMIC CHIP	0.1uF		25V	
		< CONNECTOR >				
* CN401	1-564-712-11	PIN, CONNECTOR (SMALL TYPE)10P				
		< IC >				
IC401	8-759-962-08	IC BA6208				

Ref.No.	Part No.	Description				Remark
		< COIL >				
L401	1-408-080-00	INDUCTOR	100uH			
L402	1-408-080-00	INDUCTOR	100uH			
L403	1-408-080-00	INDUCTOR	100uH			
		< VARIABLE RESISTOR >				
RV301	1-241-840-11	RES, VAR, CARBON 20K (VOLUME)				
**********						
	A-3275-714-A	CLV BOARD, (MD) COMPLETE				
		**********				
	1-645-921-11	CLV FLEXIBLE BOARD				
	1-649-066-11	RELAY (B) FLEXIBLE BOARD				
	3-831-441-11	CUSHION (B)				
		< CAPACITOR >				
C701	1-164-227-11	CERAMIC CHIP	0.022uF	10%	25V	
C702	1-163-809-11	CERAMIC CHIP	0.047uF	10%	25V	
C703	1-164-227-11	CERAMIC CHIP	0.022uF	10%	25V	
C704	1-164-005-11	CERAMIC CHIP	0.47uF		25V	
C705	1-162-964-11	CERAMIC CHIP	0.001uF	10%	50V	
C706	1-162-964-11	CERAMIC CHIP	0.001uF	10%	50V	
C707	1-162-964-11	CERAMIC CHIP	0.001uF	10%	50V	
C708	1-162-967-11	CERAMIC CHIP	0.0033uF	10%	50V	
C709	1-164-004-11	CERAMIC CHIP	0.1uF	10%	25V	
C710	1-164-005-11	CERAMIC CHIP	0.47uF		25V	
C711	1-164-360-11	CERAMIC CHIP	0.1uF		16V	
		< CONNECTOR >				
CN701	1-573-355-11	CONNECTOR, FFC/FPC 15P				
CN702	1-573-347-11	CONNECTOR, FFC/FPC 7P				
		< IC >				
IC701	8-759-098-52	IC CXA-8027N-ELL2000				
		< RESISTOR >				
R701	1-218-716-11	METAL CHIP	10K	0.50%	1/16W	
R702	1-218-716-11	METAL CHIP	10K	0.50%	1/16W	
R703	1-216-815-11	METAL CHIP	330	5%	1/16W	
R704	1-217-671-11	METAL CHIP	1	5%	1/10W	
R705	1-217-671-11	METAL CHIP	1	5%	1/10W	
R706	1-216-827-11	METAL CHIP	3.3K	5%	1/16W	
R707	1-216-857-11	METAL CHIP	1M	5%	1/16W	
		< SWITCH >				
S701	1-692-363-11	SWITCH, PUSH (1 KEY) (DISCPRO)				
S702	1-692-273-11	SWITCH, PUSH (1 KEY) (RFLCT)				
S703	1-572-467-31	SWITCH, PUSH (1 KEY) (LS)				

Ref.No.	Part No.	Description			Remark
**********					
*	A-3275-715-A	CONTROL BOARD, (MD) COMPLETE			
		**********			
		< CAPACITOR >			
C102	1-162-927-11	CERAMIC CHIP 100PF	5%	50V	
C103	1-135-180-21	TANTALUM CHIP 3.3uF	20%	6.3V	
C104	1-104-630-11	TANTAL. CHIP 33uF	20%	6.3V	
C105	1-162-957-11	CERAMIC CHIP 220PF	5%	50V	
C106	1-162-927-11	CERAMIC CHIP 100PF	5%	50V	
C107	1-162-952-11	CERAMIC CHIP 82PF	5%	50V	
C109	1-135-180-21	TANTALUM CHIP 3.3uF	20%	6.3V	
C202	1-162-927-11	CERAMIC CHIP 100PF	5%	50V	
C203	1-135-180-21	TANTALUM CHIP 3.3uF	20%	6.3V	
C204	1-104-630-11	TANTAL. CHIP 33uF	20%	6.3V	
C205	1-162-957-11	CERAMIC CHIP 220PF	5%	50V	
C206	1-162-927-11	CERAMIC CHIP 100PF	5%	50V	
C207	1-162-952-11	CERAMIC CHIP 82PF	5%	50V	
C209	1-135-180-21	TANTALUM CHIP 3.3uF	20%	6.3V	
C301	1-135-263-21	TANTAL. CHIP 10uF	20%	10V	
C303	1-135-232-11	TANTAL. CHIP 10uF	20%	16V	
C357	1-135-263-21	TANTAL. CHIP 10uF	20%	10V	
C358	1-135-263-21	TANTAL. CHIP 10uF	20%	10V	
C813	1-164-346-11	CERAMIC CHIP 1uF		16V	
C901	1-164-156-11	CERAMIC CHIP 0.1uF		25V	
C902	1-164-156-11	CERAMIC CHIP 0.1uF		25V	
C903	1-104-611-11	CAP,CHIP MICA 1500PF			
C904	1-135-265-21	TANTAL. CHIP 33uF	20%	10V	
C905	1-164-336-11	CERAMIC CHIP 0.33uF		25V	
C906	1-135-149-21	TANTALUM CHIP 2.2uF	20%	10V	
C907	1-135-070-00	TANTALUM CHIP 0.1uF	10%	35V	
C908	1-162-964-11	CERAMIC CHIP 0.001uF	10%	50V	
C909	1-135-240-21	TANTAL. CHIP 47uF	20%	10V	
C910	1-162-967-11	CERAMIC CHIP 0.0033uF	10%	50V	
C911	1-164-336-11	CERAMIC CHIP 0.33uF		25V	
C912	1-135-240-21	TANTAL. CHIP 47uF	20%	10V	
C913	1-162-965-11	CERAMIC CHIP 0.0015uF	10%	50V	
C914	1-162-967-11	CERAMIC CHIP 0.0033uF	10%	50V	
C915	1-135-240-21	TANTAL. CHIP 47uF	20%	10V	
C5029	1-162-970-11	CERAMIC CHIP 0.01uF	10%	25V	
		< CONNECTOR >			
CN302	1-573-915-11	CONNECTOR, FFC/FPC (ZIF) 6P			
CN303	1-580-056-21	PIN, CONNECTOR 3P			
CN801	1-573-915-11	CONNECTOR, FFC/FPC (ZIF) 6P			
CN802	1-566-532-11	CONNECTOR, FPC (ZIF) 16P			
CN803	1-573-916-11	CONNECTOR, FFC/FPC (ZIF) 7P			
CN804	1-573-370-21	CONNECTOR, FFC/FPC 30P			
CN901	1-573-346-21	CONNECTOR, FFC/FPC 6P			
* CN902	1-580-055-21	PIN, CONNECTOR 2P			

Ref.No.	Part No.	Description			Remark
		< DIODE >			
D101	8-719-017-58	DIODE MA8068			
D201	8-719-017-58	DIODE MA8068			
D901	8-719-210-56	DIODE EC10QS10			
D902	8-719-210-56	DIODE EC10QS10			
D903	8-719-210-56	DIODE EC10QS10			
D904	8-719-210-56	DIODE EC10QS10			
D905	8-719-210-56	DIODE EC10QS10			
D906	8-719-210-56	DIODE EC10QS10			
D907	8-719-975-33	DIODE RB110C			
		< IC >			
IC301	8-759-700-62	IC NJM4562D			
IC901	8-759-095-65	IC TC74ACT540FS			
IC902	8-759-095-67	IC TC74ACT541FS			
IC904	8-759-521-35	IC TL5001CD			
IC905	8-759-031-84	IC SC7S04F			
		< COIL >			
L901	1-402-831-21	COIL, CHOKE 68uH			
		< LINE FILTER >			
LF303	1-402-984-11	FILTER, COMMON MODE			
		< TRANSISTOR >			
Q104	8-729-144-16	TRANSISTOR 2SD2228-D44D45			
Q204	8-729-144-16	TRANSISTOR 2SD2228-D44D45			
Q308	8-729-144-16	TRANSISTOR 2SD2228-D44D45			
Q512	8-729-922-10	TRANSISTOR 2SA1577-QR			
Q901	8-729-018-75	TRANSISTOR 2SJ278MYTR			
Q902	8-729-018-75	TRANSISTOR 2SJ278MYTR			
Q903	8-729-017-65	TRANSISTOR 2SK1764KYTR			
Q904	8-729-017-65	TRANSISTOR 2SK1764KYTR			
Q905	8-729-923-45	TRANSISTOR 2SB1308-QR			
Q906	8-729-425-18	TRANSISTOR XN4504			
Q907	8-729-920-XX	TRANSISTOR DTA114EU			
Q908	8-729-907-00	TRANSISTOR DTC114EU			
		< RESISTOR >			
R105	1-216-795-11	METAL CHIP	6.8K	0.50% 1/16W	
R107	1-218-883-11	METAL CHIP	33K	0.50% 1/16W	
R108	1-218-727-11	METAL CHIP	30K	0.50% 1/16W	
R109	1-218-698-11	METAL CHIP	1.8K	0.50% 1/16W	
R110	1-216-812-11	METAL CHIP	180	5% 1/16W	
R111	1-216-857-11	METAL CHIP	1M	5% 1/16W	
R141	1-216-833-11	METAL CHIP	10K	5% 1/16W	
R155	1-216-845-11	METAL CHIP	100K	5% 1/16W	
R161	1-216-817-11	METAL CHIP	470	5% 1/16W	
R205	1-216-795-11	METAL CHIP	6.8K	0.50% 1/16W	

CONTROL (MD) | MAIN (MD)

Ref.No.	Part No.	Description				Remark
R207	1-218-883-11	METAL CHIP	33K	0.50%	1/16W	
R208	1-218-727-11	METAL CHIP	30K	0.50%	1/16W	
R209	1-218-698-11	METAL CHIP	1.8K	0.50%	1/16W	
R210	1-216-812-11	METAL CHIP	180	5%	1/16W	
R211	1-216-857-11	METAL CHIP	1M	5%	1/16W	
R241	1-216-833-11	METAL CHIP	10K	5%	1/16W	
R255	1-216-845-11	METAL CHIP	100K	5%	1/16W	
R261	1-216-817-11	METAL CHIP	470	5%	1/16W	
R301	1-218-745-11	METAL CHIP	160K	0.50%	1/16W	
R302	1-216-845-11	METAL CHIP	100K	5%	1/16W	
R368	1-216-845-11	METAL CHIP	100K	5%	1/16W	
R831	1-216-295-00	METAL CHIP	0	5%	1/10W	
R853	1-218-725-11	METAL CHIP	24K	0.50%	1/16W	
R854	1-218-675-11	METAL CHIP	200	0.50%	1/16W	
R855	1-218-676-11	METAL CHIP	220	0.50%	1/16W	
R856	1-216-814-11	METAL CHIP	270	5%	1/16W	
R857	1-218-680-11	METAL CHIP	330	0.50%	1/16W	
R858	1-218-482-11	METAL CHIP	430	0.50%	1/16W	
R859	1-218-289-11	METAL CHIP	510	0.50%	1/16W	
R860	1-220-373-11	METAL CHIP	620	0.50%	1/16W	
R861	1-218-675-11	METAL CHIP	200	0.50%	1/16W	
R862	1-218-676-11	METAL CHIP	220	0.50%	1/16W	
R863	1-216-814-11	METAL CHIP	270	5%	1/16W	
R865	1-218-680-11	METAL CHIP	330	0.50%	1/16W	
R868	1-218-482-11	METAL CHIP	430	0.50%	1/16W	
R870	1-218-289-11	METAL CHIP	510	0.50%	1/16W	
R872	1-220-373-11	METAL CHIP	620	0.50%	1/16W	
R873	1-216-820-11	METAL CHIP	820	5%	1/16W	
R874	1-218-270-11	METAL CHIP	1.1K	0.50%	1/16W	
R875	1-216-823-11	METAL CHIP	1.5K	5%	1/16W	
R877	1-218-701-11	METAL CHIP	2.4K	0.50%	1/16W	
R878	1-218-706-11	METAL CHIP	3.9K	0.50%	1/16W	
R879	1-218-344-11	METAL CHIP	7.5K	0.50%	1/16W	
R901	1-216-845-11	METAL CHIP	100K	5%	1/16W	
R902	1-216-845-11	METAL CHIP	100K	5%	1/16W	
R903	1-216-845-11	METAL CHIP	100K	5%	1/16W	
R904	1-216-845-11	METAL CHIP	100K	5%	1/16W	
R905	1-217-806-11	METAL GLAZE	1	5%	1/8W	
R906	1-217-806-11	METAL GLAZE	1	5%	1/8W	
R907	1-216-134-00	METAL CHIP	2.2	5%	1/8W	
R908	1-216-843-11	METAL CHIP	68K	5%	1/16W	
R909	1-218-295-11	METAL GLAZE	43K	5%	1/16W	
R910	1-216-853-11	METAL CHIP	470K	5%	1/16W	
R911	1-216-829-11	METAL CHIP	4.7K	5%	1/16W	
R913	1-216-186-00	METAL GLAZE	330	5%	1/8W	
R914	1-218-724-11	METAL CHIP	22K	0.50%	1/16W	
R915	1-218-344-11	METAL CHIP	7.5K	0.50%	1/16W	
R918	1-216-833-11	METAL CHIP	10K	5%	1/16W	
R919	1-216-829-11	METAL CHIP	4.7K	5%	1/16W	

Ref.No.	Part No.	Description	Remark
		< SWITCH >	
S811	1-572-473-31	SWITCH, TACTIL (▮▮)	
S812	1-692-088-11	SWITCH, TACTIL (⏏)	
S813	1-572-473-31	SWITCH, TACTIL (■)	
S814	1-572-473-31	SWITCH, TACTIL (DATE)	
S815	1-572-473-31	SWITCH, TACTIL (▶)	
S816	1-572-473-31	SWITCH, TACTIL (▶▶)	
S817	1-572-473-31	SWITCH, TACTIL (◀◀)	
S818	1-572-473-31	SWITCH, TACTIL (ENTER/REPEAT)	
S819	1-572-473-31	SWITCH, TACTIL (⏮)	
S820	1-572-473-31	SWITCH, TACTIL (⏭)	
S821	1-572-473-31	SWITCH, TACTIL (DISC NAME)	
S822	1-572-473-31	SWITCH, TACTIL (TRACK NAME)	
S823	1-572-473-31	SWITCH, TACTIL (0)	
S824	1-572-473-31	SWITCH, TACTIL (1)	
S825	1-572-473-31	SWITCH, TACTIL (2)	
S826	1-572-473-31	SWITCH, TACTIL (3)	
S827	1-572-473-31	SWITCH, TACTIL (4)	
S828	1-572-473-31	SWITCH, TACTIL (5)	
S829	1-572-473-31	SWITCH, TACTIL (6)	
S830	1-572-473-31	SWITCH, TACTIL (7)	
S831	1-572-473-31	SWITCH, TACTIL (8)	
S832	1-572-473-31	SWITCH, TACTIL (9)	

****

* A-3276-055-A MAIN BOARD, (MD) COMPLETE
****

2-123-861-01 SCREW, TAPPING, P1.7X3
3-831-441-XX SPACER
3-831-441-11 CUSHION (B)
4-955-523-03 HOLDER (TERMINAL)
4-955-524-01 CONTACT, PLUS

4-955-525-01 CONTACT, MINUS
4-955-534-01 TERMINAL BOARD
4-957-306-41 CUSHION
9-911-841-XX CUSHION, CASSETTE LID

< CAPACITOR >

C101	1-162-953-11	CERAMIC CHIP	100PF	5%	50V
C110	1-135-237-11	TANTAL. CHIP	2.2uF	20%	6.3V
C112	1-135-237-11	TANTAL. CHIP	2.2uF	20%	6.3V
C113	1-135-263-21	TANTAL. CHIP	10uF	20%	10V
C115	1-164-473-11	CERAMIC CHIP	820PF	10%	50V
C116	1-162-927-11	CERAMIC CHIP	100PF	5%	50V
C117	1-162-928-11	CERAMIC CHIP	120PF	5%	50V
C118	1-162-928-11	CERAMIC CHIP	120PF	5%	50V
C119	1-162-925-11	CERAMIC CHIP	68PF	5%	50V
C120	1-162-925-11	CERAMIC CHIP	68PF	5%	50V
C121	1-137-294-11	FILM CHIP	0.01uF	5%	16V

Ref.No.	Part No.	Description			Remark
C122	1-135-181-21	TANTALUM CHIP	4.7uF	20%	6.3V
C123	1-135-091-91	TANTAL. CHIP	1uF	20%	16V
C124	1-162-953-11	CERAMIC CHIP	100PF	5%	50V
C125	1-162-966-11	CERAMIC CHIP	0.0022uF	10%	50V
C126	1-135-335-11	TANTAL. CHIP	100uF	20%	4V
C127	1-162-964-11	CERAMIC CHIP	0.001uF	10%	50V
C128	1-135-335-11	TANTAL. CHIP	100uF	20%	4V
C129	1-162-925-11	CERAMIC CHIP	68PF	5%	50V
C130	1-162-924-11	CERAMIC CHIP	56PF	5%	50V
C131	1-162-965-11	CERAMIC CHIP	0.0015uF	10%	50V
C132	1-164-346-11	CERAMIC CHIP	1uF		16V
C134	1-162-959-11	CERAMIC CHIP	330PF	5%	50V
C135	1-135-263-21	TANTAL. CHIP	10uF	20%	10V
C136	1-135-237-11	TANTAL. CHIP	2.2uF	20%	6.3V
C137	1-162-957-11	CERAMIC CHIP	220PF	5%	50V
C138	1-162-922-11	CERAMIC CHIP	39PF	5%	50V
C140	1-162-964-11	CERAMIC CHIP	0.001uF	10%	50V
C141	1-162-964-11	CERAMIC CHIP	0.001uF	10%	50V
C201	1-162-953-11	CERAMIC CHIP	100PF	5%	50V
C210	1-135-237-11	TANTAL. CHIP	2.2uF	20%	6.3V
C212	1-135-237-11	TANTAL. CHIP	2.2uF	20%	6.3V
C215	1-164-473-11	CERAMIC CHIP	820PF	10%	50V
C216	1-162-927-11	CERAMIC CHIP	100PF	5%	50V
C217	1-162-928-11	CERAMIC CHIP	120PF	5%	50V
C218	1-162-928-11	CERAMIC CHIP	120PF	5%	50V
C219	1-162-925-11	CERAMIC CHIP	68PF	5%	50V
C220	1-162-925-11	CERAMIC CHIP	68PF	5%	50V
C221	1-137-294-11	FILM CHIP	0.01uF	5%	16V
C222	1-135-181-21	TANTALUM CHIP	4.7uF	20%	6.3V
C223	1-135-091-91	TANTAL. CHIP	1uF	20%	16V
C224	1-162-953-11	CERAMIC CHIP	100PF	5%	50V
C225	1-162-966-11	CERAMIC CHIP	0.0022uF	10%	50V
C226	1-135-335-11	TANTAL. CHIP	100uF	20%	4V
C227	1-162-964-11	CERAMIC CHIP	0.001uF	10%	50V
C228	1-135-335-11	TANTAL. CHIP	100uF	20%	4V
C229	1-162-925-11	CERAMIC CHIP	68PF	5%	50V
C230	1-162-924-11	CERAMIC CHIP	56PF	5%	50V
C231	1-162-965-11	CERAMIC CHIP	0.0015uF	10%	50V
C232	1-164-346-11	CERAMIC CHIP	1uF		16V
C234	1-162-959-11	CERAMIC CHIP	330PF	5%	50V
C235	1-135-263-21	TANTAL. CHIP	10uF	20%	10V
C236	1-135-237-11	TANTAL. CHIP	2.2uF	20%	6.3V
C237	1-162-957-11	CERAMIC CHIP	220PF	5%	50V
C238	1-162-922-11	CERAMIC CHIP	39PF	5%	50V
C240	1-162-964-11	CERAMIC CHIP	0.001uF	10%	50V
C241	1-162-964-11	CERAMIC CHIP	0.001uF	10%	50V
C305	1-135-264-21	TANTAL. CHIP	22uF	20%	10V
C306	1-164-360-11	CERAMIC CHIP	0.1uF		16V
C308	1-164-360-11	CERAMIC CHIP	0.1uF		16V
C309	1-135-091-91	TANTAL. CHIP	1uF	20%	16V
C310	1-135-334-11	TANTAL. CHIP	100uF	20%	6.3V
C311	1-135-263-21	TANTAL. CHIP	10uF	20%	10V
C312	1-164-360-11	CERAMIC CHIP	0.1uF		16V
C313	1-164-173-11	CERAMIC CHIP	0.0039uF	10%	50V
C314	1-164-360-11	CERAMIC CHIP	0.1uF		16V
C315	1-135-264-21	TANTAL. CHIP	22uF	20%	10V
C316	1-135-263-21	TANTAL. CHIP	10uF	20%	10V
C317	1-135-264-21	TANTAL. CHIP	22uF	20%	10V
C318	1-135-263-21	TANTAL. CHIP	10uF	20%	10V
C319	1-164-360-11	CERAMIC CHIP	0.1uF		16V
C320	1-164-360-11	CERAMIC CHIP	0.1uF		16V
C321	1-135-181-21	TANTALUM CHIP	4.7uF	20%	6.3V
C322	1-104-630-11	TANTAL. CHIP	33uF	20%	6.3V
C323	1-164-360-11	CERAMIC CHIP	0.1uF		16V
C324	1-164-360-11	CERAMIC CHIP	0.1uF		16V
C325	1-135-263-21	TANTAL. CHIP	10uF	20%	10V
C326	1-164-360-11	CERAMIC CHIP	0.1uF		16V
C327	1-104-630-11	TANTAL. CHIP	33uF	20%	6.3V
C328	1-164-360-11	CERAMIC CHIP	0.1uF		16V
C329	1-162-953-11	CERAMIC CHIP	100PF	5%	50V
C330	1-164-360-11	CERAMIC CHIP	0.1uF		16V
C331	1-135-264-21	TANTAL. CHIP	22uF	20%	10V
C332	1-135-181-21	TANTALUM CHIP	4.7uF	20%	6.3V
C333	1-135-263-21	TANTAL. CHIP	10uF	20%	10V
C334	1-135-181-21	TANTALUM CHIP	4.7uF	20%	6.3V
C335	1-162-964-11	CERAMIC CHIP	0.001uF	10%	50V
C336	1-164-360-11	CERAMIC CHIP	0.1uF		16V
C337	1-164-489-11	CERAMIC CHIP	0.22uF	10%	16V
C338	1-135-264-21	TANTAL. CHIP	22uF	20%	10V
C339	1-162-964-11	CERAMIC CHIP	0.001uF	10%	50V
C341	1-135-264-21	TANTAL. CHIP	22uF	20%	10V
C342	1-162-964-11	CERAMIC CHIP	0.001uF	10%	50V
C343	1-164-360-11	CERAMIC CHIP	0.1uF		16V
C344	1-162-964-11	CERAMIC CHIP	0.001uF	10%	50V
C345	1-135-240-21	TANTAL. CHIP	47uF	20%	10V
C346	1-135-264-21	TANTAL. CHIP	22uF	20%	10V
C347	1-135-181-21	TANTALUM CHIP	4.7uF	20%	6.3V
C350	1-164-361-11	CERAMIC CHIP	0.047uF		16V
C351	1-104-630-11	TANTAL. CHIP	33uF	20%	6.3V
C354	1-135-263-21	TANTAL. CHIP	10uF	20%	10V
C356	1-164-361-11	CERAMIC CHIP	0.047uF		16V
C359	1-164-505-11	CERAMIC CHIP	2.2uF		16V
C360	1-164-505-11	CERAMIC CHIP	2.2uF		16V
C361	1-164-361-11	CERAMIC CHIP	0.047uF		16V
C362	1-162-964-11	CERAMIC CHIP	0.001uF	10%	50V
C363	1-162-970-11	CERAMIC CHIP	0.01uF	10%	25V
C364	1-162-970-11	CERAMIC CHIP	0.01uF	10%	25V
C366	1-162-964-11	CERAMIC CHIP	0.001uF	10%	50V
C426	1-135-263-21	TANTAL. CHIP	10uF	20%	10V
C470	1-164-505-11	CERAMIC CHIP	2.2uF		16V

MAIN (MD)

Ref.No.	Part No.	Description			Remark
C471	1-164-505-11	CERAMIC CHIP	2.2uF		16V
C472	1-162-970-11	CERAMIC CHIP	0.01uF	10%	25V
C474	1-162-964-11	CERAMIC CHIP	0.001uF	10%	50V
C475	1-162-970-11	CERAMIC CHIP	0.01uF	10%	25V
C501	1-135-264-21	TANTAL. CHIP	22uF	20%	10V
C502	1-135-264-21	TANTAL. CHIP	22uF	20%	10V
C503	1-135-264-21	TANTAL. CHIP	22uF	20%	10V
C504	1-164-360-11	CERAMIC CHIP	0.1uF		16V
C505	1-164-360-11	CERAMIC CHIP	0.1uF		16V
C506	1-135-232-11	TANTAL. CHIP	10uF	20%	16V
C507	1-135-091-91	TANTAL. CHIP	1uF	20%	16V
C508	1-162-964-11	CERAMIC CHIP	0.001uF	10%	50V
C509	1-135-264-21	TANTAL. CHIP	22uF	20%	10V
C510	1-162-970-11	CERAMIC CHIP	0.01uF	10%	25V
C511	1-162-964-11	CERAMIC CHIP	0.001uF	10%	50V
C512	1-164-490-11	CERAMIC CHIP	0.068uF		16V
C513	1-162-964-11	CERAMIC CHIP	0.001uF	10%	50V
C514	1-162-958-11	CERAMIC CHIP	270PF	5%	50V
C515	1-162-962-11	CERAMIC CHIP	470PF	10%	50V
C516	1-162-962-11	CERAMIC CHIP	470PF	10%	50V
C517	1-162-964-11	CERAMIC CHIP	0.001uF	10%	50V
C518	1-162-958-11	CERAMIC CHIP	270PF	5%	50V
C519	1-135-264-21	TANTAL. CHIP	22uF	20%	10V
C520	1-162-964-11	CERAMIC CHIP	0.001uF	10%	50V
C521	1-162-969-11	CERAMIC CHIP	0.0068uF	10%	25V
C522	1-135-073-00	TANTALUM CHIP	0.33uF	10%	35V
C523	1-164-360-11	CERAMIC CHIP	0.1uF		16V
C524	1-164-677-11	CERAMIC CHIP	0.033uF	10%	16V
C525	1-162-970-11	CERAMIC CHIP	0.01uF	10%	25V
C526	1-164-005-11	CERAMIC CHIP	0.47uF		25V
C527	1-162-979-11	CERAMIC CHIP	0.0027uF	10%	50V
C529	1-162-966-11	CERAMIC CHIP	0.0022uF	10%	50V
C530	1-162-927-11	CERAMIC CHIP	100PF	5%	50V
C531	1-162-968-11	CERAMIC CHIP	0.0047uF	10%	50V
C532	1-135-264-21	TANTAL. CHIP	22uF	20%	10V
C533	1-135-264-21	TANTAL. CHIP	22uF	20%	10V
C534	1-164-490-11	CERAMIC CHIP	0.068uF		16V
C535	1-162-961-11	CERAMIC CHIP	330PF	10%	50V
C536	1-162-970-11	CERAMIC CHIP	0.01uF	10%	25V
C537	1-135-181-21	TANTALUM CHIP	4.7uF	20%	6.3V
C538	1-164-360-11	CERAMIC CHIP	0.1uF		16V
C539	1-164-360-11	CERAMIC CHIP	0.1uF		16V
C540	1-164-346-11	CERAMIC CHIP	1uF		16V
C541	1-162-970-11	CERAMIC CHIP	0.01uF	10%	25V
C542	1-164-346-11	CERAMIC CHIP	1uF		16V
C543	1-164-005-11	CERAMIC CHIP	0.47uF		25V
C544	1-164-005-11	CERAMIC CHIP	0.47uF		25V
C545	1-162-964-11	CERAMIC CHIP	0.001uF	10%	50V
C546	1-163-809-11	CERAMIC CHIP	0.047uF	10%	25V
C547	1-162-953-11	CERAMIC CHIP	100PF	5%	50V

Ref.No.	Part No.	Description			Remark
C548	1-164-005-11	CERAMIC CHIP	0.47uF		25V
C549	1-164-005-11	CERAMIC CHIP	0.47uF		25V
C550	1-164-677-11	CERAMIC CHIP	0.033uF	10%	16V
C551	1-162-952-11	CERAMIC CHIP	82PF	5%	50V
C552	1-164-360-11	CERAMIC CHIP	0.1uF		16V
C553	1-135-263-21	TANTAL. CHIP	10uF	20%	10V
C554	1-135-263-21	TANTAL. CHIP	10uF	20%	10V
C555	1-162-953-11	CERAMIC CHIP	100PF	5%	50V
C556	1-164-489-11	CERAMIC CHIP	0.22uF	10%	16V
C557	1-104-630-11	TANTAL. CHIP	33uF	20%	6.3V
C558	1-104-630-11	TANTAL. CHIP	33uF	20%	6.3V
C559	1-162-968-11	CERAMIC CHIP	0.0047uF	10%	50V
C561	1-135-264-21	TANTAL. CHIP	22uF	20%	10V
C563	1-164-361-11	CERAMIC CHIP	0.047uF		16V
C564	1-164-360-11	CERAMIC CHIP	0.1uF		16V
C565	1-162-964-11	CERAMIC CHIP	0.001uF	10%	50V
C567	1-164-361-11	CERAMIC CHIP	0.047uF		16V
C568	1-135-264-21	TANTAL. CHIP	22uF	20%	10V
C569	1-135-091-91	TANTAL. CHIP	1uF	20%	16V
C570	1-164-360-11	CERAMIC CHIP	0.1uF		16V
C571	1-164-346-11	CERAMIC CHIP	1uF		16V
C572	1-135-264-21	TANTAL. CHIP	22uF	20%	10V
C573	1-162-964-11	CERAMIC CHIP	0.001uF	10%	50V
C574	1-164-005-11	CERAMIC CHIP	0.47uF		25V
C578	1-164-677-11	CERAMIC CHIP	0.033uF	10%	16V
C579	1-135-224-11	TANTAL. CHIP	10uF	10%	25V
C580	1-162-964-11	CERAMIC CHIP	0.001uF	10%	50V
C581	1-135-263-21	TANTAL. CHIP	10uF	20%	10V
C582	1-135-208-11	TANTAL. CHIP	1uF	10%	10V
C583	1-135-263-21	TANTAL. CHIP	10uF	20%	10V
C584	1-163-986-00	CERAMIC CHIP	0.027uF	10%	25V
C586	1-164-360-11	CERAMIC CHIP	0.1uF		16V
C587	1-164-346-11	CERAMIC CHIP	1uF		16V
C588	1-164-360-11	CERAMIC CHIP	0.1uF		16V
C589	1-164-346-11	CERAMIC CHIP	1uF		16V
C590	1-164-346-11	CERAMIC CHIP	1uF		16V
C591	1-164-360-11	CERAMIC CHIP	0.1uF		16V
C592	1-164-346-11	CERAMIC CHIP	1uF		16V
C594	1-135-264-21	TANTAL. CHIP	22uF	20%	10V
C595	1-135-264-21	TANTAL. CHIP	22uF	20%	10V
C596	1-135-208-11	TANTAL. CHIP	1uF	10%	10V
C597	1-135-263-21	TANTAL. CHIP	10uF	20%	10V
C598	1-162-960-11	CERAMIC CHIP	220PF	10%	50V
C599	1-135-232-11	TANTAL. CHIP	10uF	20%	16V
C601	1-164-004-11	CERAMIC CHIP	0.1uF	10%	25V
C602	1-162-927-11	CERAMIC CHIP	100PF	5%	50V
C603	1-162-968-11	CERAMIC CHIP	0.0047uF	10%	50V
C604	1-164-227-11	CERAMIC CHIP	0.022uF	10%	25V
C605	1-162-915-11	CERAMIC CHIP	10PF	0.5PF	50V
C606	1-163-115-00	CERAMIC CHIP	82PF	5%	50V

Ref.No.	Part No.	Description			Remark
C607	1-162-910-11	CERAMIC CHIP	5PF	0.25PF	50V
C608	1-162-970-11	CERAMIC CHIP	0.01uF	10%	25V
C609	1-164-005-11	CERAMIC CHIP	0.47uF		25V
C610	1-163-275-11	CERAMIC CHIP	0.001uF	5%	50V
C611	1-163-275-11	CERAMIC CHIP	0.001uF	5%	50V
C612	1-164-227-11	CERAMIC CHIP	0.022uF	10%	25V
C613	1-162-915-11	CERAMIC CHIP	10PF	0.5PF	50V
C614	1-164-001-11	CERAMIC CHIP	150PF	5%	50V
C615	1-162-917-11	CERAMIC CHIP	15PF	5%	50V
C616	1-164-360-11	CERAMIC CHIP	0.1uF		16V
C617	1-104-629-11	TANTAL. CHIP	15uF	20%	6.3V
C618	1-135-264-21	TANTAL. CHIP	22uF	20%	10V
C620	1-162-917-11	CERAMIC CHIP	15PF	5%	50V
C621	1-162-917-11	CERAMIC CHIP	15PF	5%	50V
C622	1-135-264-21	TANTAL. CHIP	22uF	20%	10V
C623	1-162-970-11	CERAMIC CHIP	0.01uF	10%	25V
C624	1-163-986-00	CERAMIC CHIP	0.027uF	10%	25V
C626	1-164-005-11	CERAMIC CHIP	0.47uF		25V
C627	1-162-970-11	CERAMIC CHIP	0.01uF	10%	25V
C628	1-162-970-11	CERAMIC CHIP	0.01uF	10%	25V
C629	1-162-970-11	CERAMIC CHIP	0.01uF	10%	25V
C630	1-162-970-11	CERAMIC CHIP	0.01uF	10%	25V
C631	1-162-970-11	CERAMIC CHIP	0.01uF	10%	25V
C632	1-162-970-11	CERAMIC CHIP	0.01uF	10%	25V
C633	1-162-970-11	CERAMIC CHIP	0.01uF	10%	25V
C634	1-162-970-11	CERAMIC CHIP	0.01uF	10%	25V
C635	1-162-970-11	CERAMIC CHIP	0.01uF	10%	25V
C636	1-162-970-11	CERAMIC CHIP	0.01uF	10%	25V
C637	1-162-970-11	CERAMIC CHIP	0.01uF	10%	25V
C638	1-162-970-11	CERAMIC CHIP	0.01uF	10%	25V
C639	1-162-970-11	CERAMIC CHIP	0.01uF	10%	25V
C640	1-162-970-11	CERAMIC CHIP	0.01uF	10%	25V
C641	1-162-970-11	CERAMIC CHIP	0.01uF	10%	25V
C642	1-164-360-11	CERAMIC CHIP	0.1uF		16V
C643	1-162-970-11	CERAMIC CHIP	0.01uF	10%	25V
C644	1-164-360-11	CERAMIC CHIP	0.1uF		16V
C645	1-164-360-11	CERAMIC CHIP	0.1uF		16V
C650	1-164-360-11	CERAMIC CHIP	0.1uF		16V
C651	1-164-360-11	CERAMIC CHIP	0.1uF		16V
C652	1-162-962-11	CERAMIC CHIP	470PF	10%	50V
C801	1-164-360-11	CERAMIC CHIP	0.1uF		16V
C802	1-162-915-11	CERAMIC CHIP	10PF	0.5PF	50V
C803	1-162-915-11	CERAMIC CHIP	10PF	0.5PF	50V
C807	1-164-360-11	CERAMIC CHIP	0.1uF		16V
C808	1-164-360-11	CERAMIC CHIP	0.1uF		16V
C809	1-135-264-21	TANTAL. CHIP	22uF	20%	10V
C810	1-164-346-11	CERAMIC CHIP	1uF		16V
C811	1-164-360-11	CERAMIC CHIP	0.1uF		16V
C812	1-164-346-11	CERAMIC CHIP	1uF		16V
C814	1-164-346-11	CERAMIC CHIP	1uF		16V

Ref.No.	Part No.	Description			Remark
C816	1-135-334-11	TANTAL. CHIP	100uF	20%	6.3V
C817	1-164-505-11	CERAMIC CHIP	2.2uF		16V
C818	1-135-263-21	TANTAL. CHIP	10uF	20%	10V
C819	1-164-505-11	CERAMIC CHIP	2.2uF		16V
C820	1-135-263-21	TANTAL. CHIP	10uF	20%	10V
C821	1-135-181-21	TANTALUM CHIP	4.7uF	20%	6.3V
C822	1-162-970-11	CERAMIC CHIP	0.01uF	10%	25V
C824	1-162-970-11	CERAMIC CHIP	0.01uF	10%	25V
C825	1-135-263-21	TANTAL. CHIP	10uF	20%	10V
C826	1-164-505-11	CERAMIC CHIP	2.2uF		16V
C827	1-164-346-11	CERAMIC CHIP	1uF		16V
C828	1-164-360-11	CERAMIC CHIP	0.1uF		16V
C829	1-135-263-21	TANTAL. CHIP	10uF	20%	10V
C830	1-164-346-11	CERAMIC CHIP	1uF		16V
C831	1-162-962-11	CERAMIC CHIP	470PF	10%	50V
C832	1-162-962-11	CERAMIC CHIP	470PF	10%	50V
C833	1-162-962-11	CERAMIC CHIP	470PF	10%	50V
C5001	1-162-961-11	CERAMIC CHIP	330PF	10%	50V
C5012	1-164-346-11	CERAMIC CHIP	1uF		16V
C5013	1-164-245-11	CERAMIC CHIP	0.015uF	10%	25V
C5014	1-164-245-11	CERAMIC CHIP	0.015uF	10%	25V
C5015	1-162-970-11	CERAMIC CHIP	0.01uF	10%	25V
C5016	1-164-360-11	CERAMIC CHIP	0.1uF		16V
C5017	1-164-360-11	CERAMIC CHIP	0.1uF		16V
C5018	1-135-334-11	TANTAL. CHIP	100uF	20%	6.3V
C5019	1-135-334-11	TANTAL. CHIP	100uF	20%	6.3V
C5020	1-135-334-11	TANTAL. CHIP	100uF	20%	6.3V
C5022	1-164-363-11	CERAMIC CHIP	560PF	5%	50V
C5023	1-162-970-11	CERAMIC CHIP	0.01uF	10%	25V
C5025	1-162-970-11	CERAMIC CHIP	0.01uF	10%	25V
C5026	1-162-962-11	CERAMIC CHIP	470PF	10%	50V
C5027	1-163-275-11	CERAMIC CHIP	0.001uF	5%	50V
C5028	1-163-275-11	CERAMIC CHIP	0.001uF	5%	50V
C5030	1-164-360-11	CERAMIC CHIP	0.1uF		16V
C5031	1-162-965-11	CERAMIC CHIP	0.0015uF	10%	50V
C5032	1-162-953-11	CERAMIC CHIP	100PF	5%	50V
C5033	1-164-677-11	CERAMIC CHIP	0.033uF	10%	16V
C5034	1-162-970-11	CERAMIC CHIP	0.01uF	10%	25V
C5035	1-162-964-11	CERAMIC CHIP	0.001uF	10%	50V
C5036	1-162-964-11	CERAMIC CHIP	0.001uF	10%	50V
C5037	1-162-966-11	CERAMIC CHIP	0.0022uF	10%	50V
C5038	1-162-964-11	CERAMIC CHIP	0.001uF	10%	50V
C5039	1-162-970-11	CERAMIC CHIP	0.01uF	10%	25V
C5040	1-164-336-11	CERAMIC CHIP	0.33uF		25V
C5041	1-164-336-11	CERAMIC CHIP	0.33uF		25V
C5044	1-164-336-11	CERAMIC CHIP	0.33uF		25V
C5045	1-164-005-11	CERAMIC CHIP	0.47uF		25V
C5046	1-162-964-11	CERAMIC CHIP	0.001uF	10%	50V
C5047	1-162-964-11	CERAMIC CHIP	0.001uF	10%	50V
C5048	1-164-004-11	CERAMIC CHIP	0.1uF	10%	25V

MAIN (MD)

Ref.No.	Part No.	Description			Remark
C5049	1-135-232-11	TANTAL. CHIP	10uF	20% 16V	
C5050	1-162-970-11	CERAMIC CHIP	0.01uF	10% 25V	
C5051	1-135-264-21	TANTAL. CHIP	22uF	20% 10V	
C5052	1-162-970-11	CERAMIC CHIP	0.01uF	10% 25V	
C5053	1-162-970-11	CERAMIC CHIP	0.01uF	10% 25V	
C5054	1-164-360-11	CERAMIC CHIP	0.1uF	16V	
C5055	1-135-091-91	TANTAL. CHIP	1uF	20% 16V	
C5056	1-162-969-11	CERAMIC CHIP	0.0068uF	10% 25V	
C5057	1-135-237-11	TANTAL. CHIP	2.2uF	20% 6.3V	
C5058	1-135-264-21	TANTAL. CHIP	22uF	20% 10V	
C5059	1-163-809-11	CERAMIC CHIP	0.047uF	10% 25V	
C8023	1-164-004-11	CERAMIC CHIP	0.1uF	10% 25V	
		< CONNECTOR >			
CN401	1-573-315-21	CONNECTOR, BOARD TO BOARD 30P			
CN501	1-573-927-11	CONNECTOR, FFC/FPC (ZIF) 18P			
CN502	1-573-355-11	CONNECTOR, FFC/FPC 15P			
CN503	1-573-346-21	CONNECTOR, FFC/FPC 6P			
CN602	1-573-346-21	CONNECTOR, FFC/FPC 6P			
CN801	1-573-370-21	CONNECTOR, FFC/FPC 30P			
		< DIODE >			
D301	8-719-941-23	DIODE	DA204U		
D304	8-719-404-46	DIODE	MA110		
D305	8-719-404-46	DIODE	MA110		
D307	8-719-941-86	DIODE	DAN202U		
D310	8-719-404-46	DIODE	MA110		
D311	8-719-941-09	DIODE	DAP202U		
D401	8-719-974-51	DIODE	SB20-03P		
D406	8-719-941-86	DIODE	DAN202U		
D420	8-719-106-88	DIODE	RD15M-B1		
D421	8-719-106-88	DIODE	RD15M-B1		
D422	8-719-106-88	DIODE	RD15M		
D423	8-719-106-88	DIODE	RD15M		
D424	8-719-404-46	DIODE	MA110		
D502	8-719-420-51	DIODE	MA729		
D503	8-719-938-78	DIODE	SB10-05PCP		
D504	8-719-023-69	DIODE	SB007T03Q		
D505	8-719-031-17	DIODE	SB007-03Q-TL		
D506	8-719-941-23	DIODE	DA204U		
D507	8-719-420-51	DIODE	MA729		
D508	8-719-404-46	DIODE	MA110		
D509	8-719-404-46	DIODE	MA110		
D511	8-719-404-46	DIODE	MA110		
D512	8-719-404-46	DIODE	MA110		
D515	8-719-941-23	DIODE	DA204U		
D601	8-719-981-25	DIODE	KV1450		
D602	8-719-981-25	DIODE	KV1450		
D803	8-719-941-09	DIODE	DAP202U		
D804	8-719-941-86	DIODE	DAN202U		
D806	8-719-420-51	DIODE	MA729		
D807	8-719-938-75	DIODE	SB05-05CP		
D808	8-719-938-75	DIODE	SB05-05CP		
D809	8-719-421-27	DIODE	MA728		
D810	8-719-420-51	DIODE	MA729		
D811	8-719-420-51	DIODE	MA729		
D812	8-719-941-23	DIODE	DA204U		
		< FERRITE BEAD >			
FB103	1-543-949-11	BEAD, FERRITE (CHIP)			
FB104	1-543-949-11	BEAD, FERRITE (CHIP)			
FB203	1-543-949-11	BEAD, FERRITE (CHIP)			
FB204	1-543-949-11	BEAD, FERRITE (CHIP)			
FB301	1-543-949-11	BEAD, FERRITE (CHIP)			
FB302	1-543-949-11	BEAD, FERRITE (CHIP)			
FB303	1-543-949-11	BEAD, FERRITE (CHIP)			
FB304	1-543-949-11	BEAD, FERRITE (CHIP)			
FB307	1-543-949-11	BEAD, FERRITE (CHIP)			
FB308	1-543-949-11	BEAD, FERRITE (CHIP)			
FB310	1-543-948-11	BEAD, FERRITE (CHIP)			
FB313	1-543-949-11	BEAD, FERRITE (CHIP)			
FB314	1-543-949-11	BEAD, FERRITE (CHIP)			
FB501	1-543-949-11	BEAD, FERRITE (CHIP)			
FB603	1-543-949-11	BEAD, FERRITE (CHIP)			
FB604	1-543-954-21	BEAD, FERRITE (CHIP)			
FB606	1-543-949-11	BEAD, FERRITE (CHIP)			
FB607	1-543-949-11	BEAD, FERRITE (CHIP)			
FB608	1-543-949-11	BEAD, FERRITE (CHIP)			
FB609	1-543-949-11	BEAD, FERRITE (CHIP)			
FB610	1-543-949-11	BEAD, FERRITE (CHIP)			
		< IC >			
IC303	8-759-085-04	IC	M51132FP-E1		
IC304	8-759-103-25	IC	uPD4053BG		
IC305	8-759-080-34	IC	TA75W01FU-TE12R		
IC306	8-759-080-34	IC	TA75W01FU-TE12R		
IC307	8-759-097-92	IC	NJM2100V		
IC308	8-759-097-92	IC	NJM2100V		
IC309	8-759-085-06	IC	AK4501-VS-E1		
IC310	8-759-097-92	IC	NJM2100V		
IC311	8-759-510-56	IC	BA3570FS		
IC312	8-759-234-77	IC	TC4S66F		
IC314	8-759-097-92	IC	NJM2100V		
IC315	8-759-161-52	IC	S-81250PG-PD		
IC410	8-759-161-50	IC	S-81240PG-PJ		
IC501	8-752-064-34	IC	CXA1381R		
IC502	8-752-064-33	IC	CXA1380N		
IC503	8-759-053-34	IC	uPD74HC4053G		
IC504	8-759-053-34	IC	uPD74HC4053G		
IC505	8-759-080-34	IC	TA75W01FU-TE12R		

Ref.No.	Part No.	Description	Remark
IC506	8-759-035-26	IC SC7S08F	
IC507	8-752-055-94	IC CXA1602R	
IC508	8-759-053-34	IC uPD74HC4053G	
IC509	8-759-084-72	IC MPC1718FU	
IC510	8-759-031-84	IC SC7S04F	
IC511	8-759-710-79	IC NJM2107F	
IC512	8-759-710-79	IC NJM2107F	
IC513	8-759-234-77	IC TC4S66F	
IC514	8-759-087-73	IC S-80745AN-D9	
IC515	8-759-234-20	IC TC7S08F	
IC516	8-759-082-61	IC TC4W53FU-TE12R	
IC517	8-759-082-61	IC TC4W53FU-TE12R	
IC518	8-759-710-79	IC NJM2107F	
IC519	8-759-234-77	IC TC4S66F	
IC520	8-759-710-79	IC NJM2107F	
IC521	8-759-157-68	IC PGLAD-048-ELL2000	
IC522	8-759-082-61	IC TC4W53FU-TE12R	
IC601	8-752-352-18	IC CXD2525R	
IC602	8-752-354-57	IC CXD2526Q	
IC603	8-752-356-18	IC CXD2527R-1	
IC604	8-752-355-96	IC CXD2527R	
IC605	8-752-360-59	IC CXK414400TM-12U	
IC606	8-759-082-61	IC TC4W53FU-TE12R	
IC607	8-759-710-79	IC NJM2107F	
IC608	8-759-097-92	IC NJM2100V	
IC609	8-759-083-94	IC TC7W74FU	
IC610	8-759-234-20	IC TC7S08F	
IC611	8-759-081-84	IC TC7S04F	
IC612	8-759-083-94	IC TC7W74FU	
IC613	8-759-035-93	IC SC7S32F	
IC614	8-759-035-26	IC SC7S08F	
IC615	8-759-035-93	IC SC7S32F	
IC801	8-752-844-55	IC CXP81740-603Q	
IC802	8-759-908-81	IC MB3763PF	
IC803	8-759-056-84	IC S-8420AF	
IC804	8-759-087-73	IC S-80745AN-D9	
IC805	8-759-082-57	IC TC7W04FU-TE12L	
IC806	8-759-031-84	IC SC7S04F	
IC807	8-759-161-50	IC S-81240PG-PJ	
IC808	8-759-031-84	IC SC7S04F	
		< JACK >	
J401	1-580-428-11	JACK, DC	
		< COIL >	
L101	1-412-979-21	INDUCTOR 1uH	
L201	1-412-979-21	INDUCTOR 1uH	
L301	1-412-029-11	INDUCTOR CHIP 10uH	
L302	1-412-032-11	INDUCTOR CHIP 100uH	
L303	1-412-032-11	INDUCTOR CHIP 100uH	
L304	1-412-029-11	INDUCTOR CHIP 10uH	
L306	1-410-997-31	INDUCTOR CHIP 2.2uH	
L307	1-412-997-21	INDUCTOR 33uH	
L308	1-412-997-21	INDUCTOR 33uH	
L309	1-412-979-21	INDUCTOR 1uH	
L501	1-412-029-11	INDUCTOR CHIP 10uH	
L502	1-412-029-11	INDUCTOR CHIP 10uH	
L503	1-412-029-11	INDUCTOR CHIP 10uH	
L504	9-910-999-33	INDUCTOR 560UH	
L505	1-414-203-11	INDUCTOR 100uH	
L506	1-414-203-11	INDUCTOR 100uH	
L507	1-414-203-11	INDUCTOR 100uH	
L508	1-414-203-11	INDUCTOR 100uH	
L510	1-412-011-31	INDUCTOR CHIP 27uH	
L511	1-412-032-11	INDUCTOR CHIP 100uH	
L601	1-412-029-11	INDUCTOR CHIP 10uH	
L602	1-412-029-11	INDUCTOR CHIP 10uH	
L603	1-414-200-21	INDUCTOR 1uH	
L604	1-414-201-21	INDUCTOR 5.6uH	
L605	1-412-029-11	INDUCTOR CHIP 10uH	
L606	1-412-029-11	INDUCTOR CHIP 10uH	
		< LINE FILTER >	
LF301	1-402-984-11	FILTER, COMMON MODE	
LF302	1-402-984-11	FILTER, COMMON MODE	
LF304	1-402-984-11	FILTER, COMMON MODE	
LF401	1-402-951-11	COIL, LINE FILTER	
		< IC LINK >	
⚠PS401	1-533-282-21	LINK, IC	
		< TRANSISTOR >	
Q101	8-729-144-16	TRANSISTOR 2SD2228-D44D45	
Q102	8-729-144-16	TRANSISTOR 2SD2228-D44D45	
Q103	8-729-144-16	TRANSISTOR 2SD2228-D44D45	
Q105	8-729-144-16	TRANSISTOR 2SD2228-D44D45	
Q201	8-729-144-16	TRANSISTOR 2SD2228-D44D45	
Q202	8-729-144-16	TRANSISTOR 2SD2228-D44D45	
Q203	8-729-144-16	TRANSISTOR 2SD2228-D44D45	
Q205	8-729-144-16	TRANSISTOR 2SD2228-D44D45	
Q301	8-729-144-16	TRANSISTOR 2SD2228-D44D45	
Q302	8-729-907-39	TRANSISTOR IMD2	
Q303	8-729-906-33	TRANSISTOR DTC114YU	
Q304	8-729-906-33	TRANSISTOR DTC114YU	
Q306	8-729-907-39	TRANSISTOR IMD2	
Q307	8-729-907-39	TRANSISTOR IMD2	
Q309	8-729-402-84	TRANSISTOR XN4601	
Q310	8-729-402-84	TRANSISTOR XN4601	
Q311	8-729-905-12	TRANSISTOR DTA144EU	
Q312	8-729-924-31	TRANSISTOR DTA114WU	

The components identified by mark ⚠ or dotted line with mark ⚠ are critical for safety. Replace only with part number specified.	Les composants identifiés par une marque ⚠ sont critiques pour la sécurité. Ne les remplacer que par une piéce portant le numéro spécifié.

MAIN (MD)

Ref.No.	Part No.	Description				Remark
Q401	8-729-931-42	TRANSISTOR	DTC115EK			
Q402	8-729-931-42	TRANSISTOR	DTC115EK			
Q409	8-729-907-00	TRANSISTOR	DTC114EU			
Q445	8-729-924-31	TRANSISTOR	DTA114WU-T106			
Q446	8-729-905-12	TRANSISTOR	DTA144EU			
Q448	8-729-905-12	TRANSISTOR	DTA144EU			
Q449	8-729-924-65	TRANSISTOR	DTC123YU			
Q450	8-729-905-12	TRANSISTOR	DTA144EU			
Q451	8-729-924-65	TRANSISTOR	DTC123YU			
Q452	8-729-905-18	TRANSISTOR	DTC144EU			
Q501	8-729-101-07	TRANSISTOR	2SB798-DL			
Q502	8-729-216-22	TRANSISTOR	2SA1162			
Q503	8-729-922-10	TRANSISTOR	2SA1577-QR			
Q508	8-729-420-74	TRANSISTOR	2SD1328-RST			
Q509	8-729-905-61	TRANSISTOR	DTC124EU			
Q510	8-729-905-12	TRANSISTOR	DTA144EU			
Q512	8-729-905-61	TRANSISTOR	DTC124EU			
Q513	8-729-402-84	TRANSISTOR	XN4601			
Q516	8-729-924-68	TRANSISTOR	DTC114WU			
Q518	8-729-120-28	TRANSISTOR	2SC1623-L5L6			
Q519	8-729-120-28	TRANSISTOR	2SC1623-L5L6			
Q520	8-729-144-16	TRANSISTOR	2SD2228-D44D45			
Q801	8-729-905-12	TRANSISTOR	DTA144EU			
Q802	8-729-906-33	TRANSISTOR	DTC114YU			
Q803	8-729-905-18	TRANSISTOR	DTC144EU			
Q804	8-729-922-10	TRANSISTOR	2SA1577-QR			
Q805	8-729-905-18	TRANSISTOR	DTC144EU			
Q806	8-729-824-26	TRANSISTOR	2SA1338-5-TA			
Q807	8-729-905-12	TRANSISTOR	DTA144EU			
		< RESISTOR >				
R101	1-216-817-11	METAL CHIP	470	5%	1/16W	
R103	1-218-732-11	METAL CHIP	47K	0.50%	1/16W	
R104	1-216-857-11	METAL CHIP	1M	5%	1/16W	
R112	1-216-864-11	METAL GLAZE	0	5%	1/16W	
R113	1-218-738-11	METAL CHIP	82K	0.50%	1/16W	
R114	1-218-740-11	METAL CHIP	100K	0.50%	1/16W	
R115	1-218-721-11	METAL CHIP	16K	0.50%	1/16W	
R116	1-216-795-11	METAL CHIP	6.8K	0.50%	1/16W	
R117	1-218-716-11	METAL CHIP	10K	0.50%	1/16W	
R118	1-216-821-11	METAL CHIP	1K	5%	1/16W	
R119	1-216-821-11	METAL CHIP	1K	5%	1/16W	
R120	1-218-724-11	METAL CHIP	22K	0.50%	1/16W	
R121	1-218-724-11	METAL CHIP	22K	0.50%	1/16W	
R122	1-218-724-11	METAL CHIP	22K	0.50%	1/16W	
R123	1-218-724-11	METAL CHIP	22K	0.50%	1/16W	
R124	1-218-883-11	METAL CHIP	33K	0.50%	1/16W	
R125	1-218-883-11	METAL CHIP	33K	0.50%	1/16W	
R126	1-218-736-11	METAL CHIP	68K	0.50%	1/16W	
R127	1-218-736-11	METAL CHIP	68K	0.50%	1/16W	
R128	1-218-705-11	METAL CHIP	3.6K	0.50%	1/16W	
R129	1-216-823-11	METAL CHIP	1.5K	5%	1/16W	
R130	1-216-857-11	METAL CHIP	1M	5%	1/16W	
R131	1-216-833-11	METAL CHIP	10K	5%	1/16W	
R132	1-216-813-11	METAL CHIP	220	5%	1/16W	
R133	1-218-708-11	METAL CHIP	4.7K	0.50%	1/16W	
R134	1-218-724-11	METAL CHIP	22K	0.50%	1/16W	
R135	1-216-833-11	METAL CHIP	10K	5%	1/16W	
R136	1-216-800-11	METAL GLAZE	18	5%	1/16W	
R137	1-216-821-11	METAL CHIP	1K	5%	1/16W	
R138	1-216-799-11	METAL CHIP	15	5%	1/16W	
R142	1-216-821-11	METAL CHIP	1K	5%	1/16W	
R146	1-216-845-11	METAL CHIP	100K	5%	1/16W	
R147	1-216-815-11	METAL CHIP	330	5%	1/16W	
R149	1-218-704-11	METAL CHIP	3.3K	0.50%	1/16W	
R150	1-218-734-11	METAL CHIP	56K	0.50%	1/16W	
R156	1-216-833-11	METAL CHIP	10K	5%	1/16W	
R157	1-218-708-11	METAL CHIP	4.7K	0.50%	1/16W	
R158	1-218-740-11	METAL CHIP	100K	0.50%	1/16W	
R159	1-218-708-11	METAL CHIP	4.7K	0.50%	1/16W	
R162	1-216-864-11	METAL GLAZE	0	5%	1/16W	
R201	1-216-817-11	METAL CHIP	470	5%	1/16W	
R203	1-218-732-11	METAL CHIP	47K	0.50%	1/16W	
R204	1-216-857-11	METAL CHIP	1M	5%	1/16W	
R212	1-216-864-11	METAL GLAZE	0	5%	1/16W	
R213	1-218-738-11	METAL CHIP	82K	0.50%	1/16W	
R214	1-218-740-11	METAL CHIP	100K	0.50%	1/16W	
R215	1-218-721-11	METAL CHIP	16K	0.50%	1/16W	
R216	1-216-795-11	METAL CHIP	6.8K	0.50%	1/16W	
R217	1-218-716-11	METAL CHIP	10K	0.50%	1/16W	
R218	1-216-821-11	METAL CHIP	1K	5%	1/16W	
R219	1-216-821-11	METAL CHIP	1K	5%	1/16W	
R220	1-218-724-11	METAL CHIP	22K	0.50%	1/16W	
R221	1-218-724-11	METAL CHIP	22K	0.50%	1/16W	
R222	1-218-724-11	METAL CHIP	22K	0.50%	1/16W	
R223	1-218-724-11	METAL CHIP	22K	0.50%	1/16W	
R224	1-218-883-11	METAL CHIP	33K	0.50%	1/16W	
R225	1-218-883-11	METAL CHIP	33K	0.50%	1/16W	
R226	1-218-736-11	METAL CHIP	68K	0.50%	1/16W	
R227	1-218-736-11	METAL CHIP	68K	0.50%	1/16W	
R228	1-218-705-11	METAL CHIP	3.6K	0.50%	1/16W	
R229	1-216-823-11	METAL CHIP	1.5K	5%	1/16W	
R230	1-216-857-11	METAL CHIP	1M	5%	1/16W	
R231	1-216-833-11	METAL CHIP	10K	5%	1/16W	
R232	1-218-676-11	METAL CHIP	220	0.50%	1/16W	
R233	1-218-708-11	METAL CHIP	4.7K	0.50%	1/16W	
R234	1-218-724-11	METAL CHIP	22K	0.50%	1/16W	
R235	1-216-833-11	METAL CHIP	10K	5%	1/16W	
R236	1-216-800-11	METAL GLAZE	18	5%	1/16W	
R237	1-216-821-11	METAL CHIP	1K	5%	1/16W	

Ref. No.	Part No.	Description				Remark
R238	1-216-799-11	METAL CHIP	15	5%	1/16W	
R242	1-216-821-11	METAL CHIP	1K	5%	1/16W	
R246	1-216-845-11	METAL CHIP	100K	5%	1/16W	
R247	1-216-815-11	METAL CHIP	330	5%	1/16W	
R249	1-218-704-11	METAL CHIP	3.3K	0.50%	1/16W	
R250	1-218-734-11	METAL CHIP	56K	0.50%	1/16W	
R256	1-216-833-11	METAL CHIP	10K	5%	1/16W	
R257	1-218-708-11	METAL CHIP	4.7K	0.50%	1/16W	
R258	1-218-740-11	METAL CHIP	100K	0.50%	1/16W	
R259	1-218-708-11	METAL CHIP	4.7K	0.50%	1/16W	
R262	1-216-864-11	METAL GLAZE	0	5%	1/16W	
R304	1-216-833-11	METAL CHIP	10K	5%	1/16W	
R307	1-216-841-11	METAL CHIP	47K	5%	1/16W	
R308	1-216-821-11	METAL CHIP	1K	5%	1/16W	
R309	1-218-716-11	METAL CHIP	10K	0.50%	1/16W	
R310	1-216-833-11	METAL CHIP	10K	5%	1/16W	
R311	1-218-736-11	METAL CHIP	68K	0.50%	1/16W	
R313	1-218-723-11	METAL CHIP	20K	0.50%	1/16W	
R314	1-218-723-11	METAL CHIP	20K	0.50%	1/16W	
R315	1-218-708-11	METAL CHIP	4.7K	0.50%	1/16W	
R316	1-218-708-11	METAL CHIP	4.7K	0.50%	1/16W	
R318	1-216-825-11	METAL CHIP	2.2K	5%	1/16W	
R319	1-216-825-11	METAL CHIP	2.2K	5%	1/16W	
R320	1-216-864-11	METAL GLAZE	0	5%	1/16W	
R321	1-216-833-11	METAL CHIP	10K	5%	1/16W	
R322	1-216-833-11	METAL CHIP	10K	5%	1/16W	
R323	1-216-833-11	METAL CHIP	10K	5%	1/16W	
R324	1-216-833-11	METAL CHIP	10K	5%	1/16W	
R325	1-216-857-11	METAL CHIP	1M	5%	1/16W	
R330	1-216-864-11	METAL GLAZE	0	5%	1/16W	
R332	1-218-704-11	METAL CHIP	3.3K	0.50%	1/16W	
R333	1-216-822-11	METAL CHIP	1.2K	5%	1/16W	
R334	1-218-708-11	METAL CHIP	4.7K	0.50%	1/16W	
R338	1-216-864-11	METAL GLAZE	0	5%	1/16W	
R339	1-218-708-11	METAL CHIP	4.7K	0.50%	1/16W	
R340	1-216-845-11	METAL CHIP	100K	5%	1/16W	
R341	1-216-845-11	METAL CHIP	100K	5%	1/16W	
R342	1-216-823-11	METAL CHIP	1.5K	5%	1/16W	
R343	1-216-841-11	METAL CHIP	47K	5%	1/16W	
R345	1-216-835-11	METAL CHIP	15K	5%	1/16W	
R346	1-216-817-11	METAL CHIP	470	5%	1/16W	
R347	1-218-724-11	METAL CHIP	22K	0.50%	1/16W	
R348	1-216-864-11	METAL GLAZE	0	5%	1/16W	
R349	1-216-864-11	METAL GLAZE	0	5%	1/16W	
R350	1-218-698-11	METAL CHIP	1.8K	0.50%	1/16W	
R351	1-218-698-11	METAL CHIP	1.8K	0.50%	1/16W	
R352	1-218-732-11	METAL CHIP	47K	0.50%	1/16W	
R353	1-216-841-11	METAL CHIP	47K	5%	1/16W	
R354	1-216-864-11	METAL GLAZE	0	5%	1/16W	
R356	1-216-804-11	METAL CHIP	39	5%	1/16W	
R357	1-218-740-11	METAL CHIP	100K	0.50%	1/16W	
R358	1-216-857-11	METAL CHIP	1M	5%	1/16W	
R359	1-216-864-11	METAL CHIP	0	5%	1/16W	
R360	1-216-864-11	METAL CHIP	0	5%	1/16W	
R361	1-216-864-11	METAL CHIP	0	5%	1/16W	
R362	1-216-864-11	METAL CHIP	0	5%	1/16W	
R366	1-216-825-11	METAL CHIP	2.2K	5%	1/16W	
R367	1-216-825-11	METAL CHIP	2.2K	5%	1/16W	
R369	1-216-833-11	METAL CHIP	10K	5%	1/16W	
R370	1-216-830-11	METAL CHIP	5.6K	5%	1/16W	
R371	1-216-821-11	METAL CHIP	1K	5%	1/16W	
R372	1-216-841-11	METAL CHIP	47K	5%	1/16W	
R373	1-216-845-11	METAL CHIP	100K	5%	1/16W	
R374	1-216-833-11	METAL CHIP	10K	5%	1/16W	
R375	1-216-851-11	METAL CHIP	330K	5%	1/16W	
R376	1-216-845-11	METAL CHIP	100K	5%	1/16W	
R377	1-216-851-11	METAL CHIP	330K	5%	1/16W	
R378	1-216-845-11	METAL CHIP	100K	5%	1/16W	
R379	1-216-845-11	METAL CHIP	100K	5%	1/16W	
R380	1-216-833-11	METAL CHIP	10K	5%	1/16W	
R382	1-218-293-11	METAL GLAZE	24K	5%	1/16W	
R383	1-216-845-11	METAL CHIP	100K	5%	1/16W	
R387	1-216-864-11	METAL GLAZE	0	5%	1/16W	
R388	1-216-864-11	METAL GLAZE	0	5%	1/16W	
R390	1-216-864-11	METAL CHIP	0	5%	1/16W	
R402	1-216-841-11	METAL CHIP	47K	5%	1/16W	
R441	1-216-864-11	METAL CHIP	0	5%	1/16W	
R443	1-216-825-11	METAL CHIP	2.2K	5%	1/16W	
R501	1-216-847-11	METAL CHIP	150K	5%	1/16W	
R502	1-216-833-11	METAL CHIP	10K	5%	1/16W	
R503	1-216-833-11	METAL CHIP	10K	5%	1/16W	
R504	1-216-833-11	METAL CHIP	10K	5%	1/16W	
R505	1-216-833-11	METAL CHIP	10K	5%	1/16W	
R506	1-216-833-11	METAL CHIP	10K	5%	1/16W	
R507	1-216-833-11	METAL CHIP	10K	5%	1/16W	
R508	1-216-833-11	METAL CHIP	10K	5%	1/16W	
R509	1-216-833-11	METAL CHIP	10K	5%	1/16W	
R510	1-216-848-11	METAL CHIP	180K	5%	1/16W	
R511	1-216-857-11	METAL CHIP	1M	5%	1/16W	
R512	1-218-448-11	METAL GLAZE	430K	5%	1/16W	
R513	1-216-857-11	METAL CHIP	1M	5%	1/16W	
R514	1-216-838-11	METAL CHIP	27K	5%	1/16W	
R515	1-216-848-11	METAL CHIP	180K	5%	1/16W	
R516	1-216-844-11	METAL CHIP	82K	5%	1/16W	
R517	1-216-845-11	METAL CHIP	100K	5%	1/16W	
R518	1-216-830-11	METAL CHIP	5.6K	5%	1/16W	
R519	1-216-825-11	METAL CHIP	2.2K	5%	1/16W	
R520	1-216-857-11	METAL CHIP	1M	5%	1/16W	
R521	1-216-838-11	METAL CHIP	27K	5%	1/16W	
R522	1-216-838-11	METAL CHIP	27K	5%	1/16W	

MAIN (MD)

Ref. No.	Part No.	Description				Remark
R523	1-216-838-11	METAL CHIP	27K	5%	1/16W	
R524	1-216-838-11	METAL CHIP	27K	5%	1/16W	
R525	1-216-838-11	METAL CHIP	27K	5%	1/16W	
R526	1-218-738-11	METAL CHIP	82K	0.50%	1/16W	
R527	1-216-838-11	METAL CHIP	27K	5%	1/16W	
R528	1-218-738-11	METAL CHIP	82K	0.50%	1/16W	
R529	1-216-838-11	METAL CHIP	27K	5%	1/16W	
R530	1-216-849-11	METAL CHIP	220K	5%	1/16W	
R533	1-216-815-11	METAL CHIP	330	5%	1/16W	
R534	1-216-845-11	METAL CHIP	100K	5%	1/16W	
R535	1-216-845-11	METAL CHIP	100K	5%	1/16W	
R536	1-216-001-00	METAL CHIP	10	5%	1/10W	
R538	1-216-825-11	METAL CHIP	2.2K	5%	1/16W	
R539	1-216-825-11	METAL CHIP	2.2K	5%	1/16W	
R540	1-218-704-11	METAL CHIP	3.3K	0.50%	1/16W	
R541	1-216-832-11	METAL CHIP	8.2K	5%	1/16W	
R542	1-216-832-11	METAL CHIP	8.2K	5%	1/16W	
R543	1-216-832-11	METAL CHIP	8.2K	5%	1/16W	
R544	1-216-832-11	METAL CHIP	8.2K	5%	1/16W	
R545	1-218-287-11	METAL GLAZE	200	5%	1/16W	
R546	1-216-821-11	METAL CHIP	1K	5%	1/16W	
R547	1-216-825-11	METAL CHIP	2.2K	5%	1/16W	
R548	1-216-841-11	METAL CHIP	47K	5%	1/16W	
R549	1-216-825-11	METAL CHIP	2.2K	5%	1/16W	
R550	1-216-841-11	METAL CHIP	47K	5%	1/16W	
R551	1-216-857-11	METAL CHIP	1M	5%	1/16W	
R552	1-216-864-11	METAL GLAZE	0	5%	1/16W	
R553	1-216-832-11	METAL CHIP	8.2K	5%	1/16W	
R554	1-218-883-11	METAL CHIP	33K	0.50%	1/16W	
R556	1-216-833-11	METAL CHIP	10K	5%	1/16W	
R558	1-216-835-11	METAL CHIP	15K	5%	1/16W	
R559	1-216-845-11	METAL CHIP	100K	5%	1/16W	
R561	1-216-845-11	METAL CHIP	100K	5%	1/16W	
R562	1-216-845-11	METAL CHIP	100K	5%	1/16W	
R563	1-218-724-11	METAL CHIP	22K	0.50%	1/16W	
R564	1-216-825-11	METAL CHIP	2.2K	5%	1/16W	
R565	1-218-698-11	METAL CHIP	1.8K	0.50%	1/16W	
R566	1-218-883-11	METAL CHIP	33K	0.50%	1/16W	
R567	1-216-854-11	METAL CHIP	560K	5%	1/16W	
R568	1-216-845-11	METAL CHIP	100K	5%	1/16W	
R569	1-216-821-11	METAL CHIP	1K	5%	1/16W	
R570	1-218-736-11	METAL CHIP	68K	0.50%	1/16W	
R571	1-216-864-11	METAL GLAZE	0	5%	1/16W	
R572	1-218-724-11	METAL CHIP	22K	0.50%	1/16W	
R573	1-218-724-11	METAL CHIP	22K	0.50%	1/16W	
R574	1-216-848-11	METAL CHIP	180K	5%	1/16W	
R575	1-218-704-11	METAL CHIP	3.3K	0.50%	1/16W	
R577	1-216-857-11	METAL CHIP	1M	5%	1/16W	
R578	1-218-740-11	METAL CHIP	100K	0.50%	1/16W	
R579	1-216-795-11	METAL CHIP	6.8K	0.50%	1/16W	

Ref. No.	Part No.	Description				Remark
R581	1-216-817-11	METAL CHIP	470	5%	1/16W	
R582	1-216-850-11	METAL CHIP	270K	5%	1/16W	
R583	1-216-833-11	METAL CHIP	10K	5%	1/16W	
R584	1-218-708-11	METAL CHIP	4.7K	0.50%	1/16W	
R585	1-216-857-11	METAL CHIP	1M	5%	1/16W	
R586	1-218-732-11	METAL CHIP	47K	0.50%	1/16W	
R587	1-218-732-11	METAL CHIP	47K	0.50%	1/16W	
R588	1-216-833-11	METAL CHIP	10K	5%	1/16W	
R589	1-216-820-11	METAL CHIP	820	5%	1/16W	
R592	1-216-845-11	METAL CHIP	100K	5%	1/16W	
R593	1-216-845-11	METAL CHIP	100K	5%	1/16W	
R594	1-216-845-11	METAL CHIP	100K	5%	1/16W	
R595	1-216-841-11	METAL CHIP	47K	5%	1/16W	
R596	1-216-864-11	METAL GLAZE	0	5%	1/16W	
R597	1-216-833-11	METAL CHIP	10K	5%	1/16W	
R598	1-216-864-11	METAL GLAZE	0	5%	1/16W	
R599	1-216-827-11	METAL CHIP	3.3K	5%	1/16W	
R601	1-216-835-11	METAL CHIP	15K	5%	1/16W	
R602	1-216-833-11	METAL CHIP	10K	5%	1/16W	
R603	1-216-795-11	METAL CHIP	6.8K	0.50%	1/16W	
R604	1-216-845-11	METAL CHIP	100K	5%	1/16W	
R605	1-216-835-11	METAL CHIP	15K	5%	1/16W	
R606	1-216-841-11	METAL CHIP	47K	5%	1/16W	
R607	1-216-841-11	METAL CHIP	47K	5%	1/16W	
R608	1-216-795-11	METAL CHIP	6.8K	0.50%	1/16W	
R609	1-216-833-11	METAL CHIP	10K	5%	1/16W	
R610	1-216-833-11	METAL CHIP	10K	5%	1/16W	
R611	1-216-795-11	METAL CHIP	6.8K	0.50%	1/16W	
R612	1-216-845-11	METAL CHIP	100K	5%	1/16W	
R613	1-216-833-11	METAL CHIP	10K	5%	1/16W	
R614	1-218-704-11	METAL CHIP	3.3K	0.50%	1/16W	
R615	1-216-833-11	METAL CHIP	10K	5%	1/16W	
R616	1-218-331-11	METAL GLAZE	51K	5%	1/16W	
R617	1-216-821-11	METAL CHIP	1K	5%	1/16W	
R623	1-216-833-11	METAL CHIP	10K	5%	1/16W	
R624	1-216-833-11	METAL CHIP	10K	5%	1/16W	
R625	1-216-845-11	METAL CHIP	100K	5%	1/16W	
R626	1-216-821-11	METAL CHIP	1K	5%	1/16W	
R627	1-216-821-11	METAL CHIP	1K	5%	1/16W	
R629	1-216-830-11	METAL CHIP	5.6K	5%	1/16W	
R630	1-216-821-11	METAL CHIP	1K	5%	1/16W	
R631	1-216-821-11	METAL CHIP	1K	5%	1/16W	
R632	1-216-864-11	METAL GLAZE	0	5%	1/16W	
R633	1-218-676-11	METAL CHIP	220	0.50%	1/16W	
R634	1-216-841-11	METAL CHIP	47K	5%	1/16W	
R636	1-216-857-11	METAL CHIP	1M	5%	1/16W	
R637	1-216-857-11	METAL CHIP	1M	5%	1/16W	
R638	1-216-857-11	METAL CHIP	1M	5%	1/16W	
R639	1-216-857-11	METAL CHIP	1M	5%	1/16W	
R640	1-216-864-11	METAL GLAZE	0	5%	1/16W	

Ref.No.	Part No.	Description				Remark
R641	1-216-864-11	METAL GLAZE	0	5%	1/16W	
R642	1-216-864-11	METAL GLAZE	0	5%	1/16W	
R643	1-216-864-11	METAL GLAZE	0	5%	1/16W	
R644	1-216-864-11	METAL GLAZE	0	5%	1/16W	
R645	1-216-864-11	METAL GLAZE	0	5%	1/16W	
R646	1-216-864-11	METAL GLAZE	0	5%	1/16W	
R647	1-216-864-11	METAL GLAZE	0	5%	1/16W	
R648	1-216-864-11	METAL GLAZE	0	5%	1/16W	
R649	1-216-864-11	METAL GLAZE	0	5%	1/16W	
R650	1-216-864-11	METAL GLAZE	0	5%	1/16W	
R651	1-216-864-11	METAL GLAZE	0	5%	1/16W	
R655	1-216-841-11	METAL CHIP	47K	5%	1/16W	
R656	1-216-841-11	METAL CHIP	47K	5%	1/16W	
R657	1-216-821-11	METAL CHIP	1K	5%	1/16W	
R660	1-216-864-11	METAL GLAZE	0	5%	1/16W	
R665	1-216-864-11	METAL CHIP	0	5%	1/16W	
R669	1-218-698-11	METAL CHIP	1.8K	0.50%	1/16W	
R671	1-216-809-11	METAL CHIP	100	5%	1/16W	
R802	1-216-821-11	METAL CHIP	1K	5%	1/16W	
R803	1-216-821-11	METAL CHIP	1K	5%	1/16W	
R811	1-216-814-11	METAL CHIP	270	5%	1/16W	
R812	1-218-676-11	METAL CHIP	220	0.50%	1/16W	
R814	1-216-857-11	METAL CHIP	1M	5%	1/16W	
R816	1-216-845-11	METAL CHIP	100K	5%	1/16W	
R820	1-218-708-11	METAL CHIP	4.7K	0.50%	1/16W	
R821	1-216-821-11	METAL CHIP	1K	5%	1/16W	
R824	1-216-833-11	METAL CHIP	10K	5%	1/16W	
R825	1-218-708-11	METAL CHIP	4.7K	0.50%	1/16W	
R826	1-216-833-11	METAL CHIP	10K	5%	1/16W	
R828	1-218-675-11	METAL CHIP	200	0.50%	1/16W	
R829	1-216-864-11	METAL GLAZE	0	5%	1/16W	
R833	1-218-708-11	METAL CHIP	4.7K	0.50%	1/16W	
R834	1-218-708-11	METAL CHIP	4.7K	0.50%	1/16W	
R835	1-216-864-11	METAL GLAZE	0	5%	1/16W	
R836	1-216-841-11	METAL CHIP	47K	5%	1/16W	
R837	1-216-841-11	METAL CHIP	47K	5%	1/16W	
R839	1-216-841-11	METAL CHIP	47K	5%	1/16W	
R840	1-216-841-11	METAL CHIP	47K	5%	1/16W	
R841	1-216-841-11	METAL CHIP	47K	5%	1/16W	
R842	1-218-708-11	METAL CHIP	4.7K	0.50%	1/16W	
R845	1-216-841-11	METAL CHIP	47K	5%	1/16W	
R848	1-216-841-11	METAL CHIP	47K	5%	1/16W	
R849	1-216-841-11	METAL CHIP	47K	5%	1/16W	
R850	1-216-841-11	METAL CHIP	47K	5%	1/16W	
R851	1-216-841-11	METAL CHIP	47K	5%	1/16W	
R852	1-216-841-11	METAL CHIP	47K	5%	1/16W	
R870	1-216-864-11	METAL GLAZE	0	5%	1/16W	
R871	1-216-864-11	METAL GLAZE	0	5%	1/16W	
R873	1-216-864-11	METAL CHIP	0	5%	1/16W	
R874	1-216-821-11	METAL CHIP	1K	5%	1/16W	
R875	1-216-864-11	METAL GLAZE	0	5%	1/16W	
R876	1-216-864-11	METAL GLAZE	0	5%	1/16W	
R877	1-216-864-11	METAL GLAZE	0	5%	1/16W	
R878	1-216-864-11	METAL GLAZE	0	5%	1/16W	
R879	1-216-864-11	METAL CHIP	0	5%	1/16W	
R880	1-216-864-11	METAL GLAZE	0	5%	1/16W	
R881	1-216-864-11	METAL GLAZE	0	5%	1/16W	
R882	1-216-864-11	METAL GLAZE	0	5%	1/16W	
R883	1-216-864-11	METAL GLAZE	0	5%	1/16W	
R884	1-216-864-11	METAL GLAZE	0	5%	1/16W	
R885	1-216-864-11	METAL GLAZE	0	5%	1/16W	
R886	1-216-864-11	METAL GLAZE	0	5%	1/16W	
R887	1-216-864-11	METAL GLAZE	0	5%	1/16W	
R888	1-216-864-11	METAL GLAZE	0	5%	1/16W	
R889	1-216-864-11	METAL GLAZE	0	5%	1/16W	
R891	1-216-851-11	METAL CHIP	330K	5%	1/16W	
R892	1-216-864-11	METAL GLAZE	0	5%	1/16W	
R893	1-216-864-11	METAL GLAZE	0	5%	1/16W	
R894	1-216-845-11	METAL CHIP	100K	5%	1/16W	
R896	1-216-845-11	METAL CHIP	100K	5%	1/16W	
R897	1-216-853-11	METAL CHIP	470K	5%	1/16W	
R898	1-216-851-11	METAL CHIP	330K	5%	1/16W	
R899	1-216-809-11	METAL CHIP	100	5%	1/16W	
R5000	1-216-820-11	METAL CHIP	820	5%	1/16W	
R5001	1-216-864-11	METAL CHIP	0	5%	1/16W	
R5002	1-216-850-11	METAL CHIP	270K	5%	1/16W	
R5003	1-216-864-11	METAL CHIP	0	5%	1/16W	
R5005	1-216-851-11	METAL CHIP	330K	5%	1/16W	
R5006	1-216-838-11	METAL CHIP	27K	5%	1/16W	
R5007	1-216-851-11	METAL CHIP	330K	5%	1/16W	
R5008	1-218-745-11	METAL CHIP	160K	0.50%	1/16W	
R5011	1-216-833-11	METAL CHIP	10K	5%	1/16W	
R5014	1-218-708-11	METAL CHIP	4.7K	0.50%	1/16W	
R5015	1-218-883-11	METAL CHIP	33K	0.50%	1/16W	
R5016	1-218-883-11	METAL CHIP	33K	0.50%	1/16W	
R5017	1-218-736-11	METAL CHIP	68K	0.50%	1/16W	
R5018	1-218-736-11	METAL CHIP	68K	0.50%	1/16W	
R5020	1-216-857-11	METAL CHIP	1M	5%	1/16W	
R5021	1-216-849-11	METAL CHIP	220K	5%	1/16W	
R5022	1-216-835-11	METAL CHIP	15K	5%	1/16W	
R5023	1-216-864-11	METAL GLAZE	0	5%	1/16W	
R5024	1-216-864-11	METAL GLAZE	0	5%	1/16W	
R5025	1-216-859-11	METAL GLAZE	1.5M	5%	1/16W	
R5026	1-216-826-11	METAL CHIP	2.7K	5%	1/16W	
R5027	1-216-832-11	METAL CHIP	8.2K	5%	1/16W	
R5028	1-216-864-11	METAL GLAZE	0	5%	1/16W	
R5029	1-216-864-11	METAL GLAZE	0	5%	1/16W	
R5030	1-216-864-11	METAL GLAZE	0	5%	1/16W	
R5031	1-218-883-11	METAL CHIP	33K	0.50%	1/16W	
R5032	1-218-736-11	METAL CHIP	68K	0.50%	1/16W	

MAIN (MD)

Ref.No.	Part No.	Description				Remark
R5033	1-216-864-11	METAL CHIP	0	5%	1/16W	
R5034	1-216-857-11	METAL CHIP	1M	5%	1/16W	
R5035	1-216-848-11	METAL CHIP	180K	5%	1/16W	
R5036	1-218-883-11	METAL CHIP	33K	0.50%	1/16W	
R5037	1-216-848-11	METAL CHIP	180K	5%	1/16W	
R5038	1-218-883-11	METAL CHIP	33K	0.50%	1/16W	
R5039	1-216-850-11	METAL CHIP	270K	5%	1/16W	
R5040	1-216-833-11	METAL CHIP	10K	5%	1/16W	
R5041	1-216-841-11	METAL CHIP	47K	5%	1/16W	
R5042	1-216-841-11	METAL CHIP	47K	5%	1/16W	
R5043	1-216-864-11	METAL GLAZE	0	5%	1/16W	
R5044	1-216-864-11	METAL GLAZE	0	5%	1/16W	
R5045	1-216-864-11	METAL GLAZE	0	5%	1/16W	
R5046	1-216-864-11	METAL GLAZE	0	5%	1/16W	
R5047	1-216-864-11	METAL GLAZE	0	5%	1/16W	
R5048	1-216-864-11	METAL GLAZE	0	5%	1/16W	
R5049	1-216-864-11	METAL GLAZE	0	5%	1/16W	
R5053	1-216-864-11	METAL GLAZE	0	5%	1/16W	
R5054	1-216-864-11	METAL GLAZE	0	5%	1/16W	
R5055	1-216-830-11	METAL CHIP	5.6K	5%	1/16W	
R5056	1-216-864-11	METAL CHIP	0	5%	1/16W	
R5058	1-216-825-11	METAL CHIP	2.2K	5%	1/16W	
R5059	1-216-845-11	METAL CHIP	100K	5%	1/16W	
R5060	1-216-865-11	METAL CHIP	3K	5%	1/16W	
R5061	1-216-833-11	METAL CHIP	10K	5%	1/16W	
R5062	1-216-833-11	METAL CHIP	10K	5%	1/16W	
R5063	1-216-857-11	METAL CHIP	1M	5%	1/16W	
R5065	1-216-836-11	METAL CHIP	18K	5%	1/16W	
R5066	1-218-883-11	METAL CHIP	33K	0.50%	1/16W	
R5067	1-218-883-11	METAL CHIP	33K	0.50%	1/16W	
R5068	1-216-864-11	METAL GLAZE	0	5%	1/16W	
R5069	1-216-864-11	METAL GLAZE	0	5%	1/16W	
R5070	1-216-833-11	METAL CHIP	10K	5%	1/16W	
R5071	1-216-833-11	METAL CHIP	10K	5%	1/16W	
R5072	1-216-833-11	METAL CHIP	10K	5%	1/16W	
R5073	1-216-849-11	METAL CHIP	220K	5%	1/16W	
R5074	1-216-849-11	METAL CHIP	220K	5%	1/16W	
R5075	1-216-845-11	METAL CHIP	100K	5%	1/16W	
R5076	1-216-853-11	METAL CHIP	470K	5%	1/16W	
R5077	1-216-853-11	METAL CHIP	470K	5%	1/16W	
R5078	1-216-853-11	METAL CHIP	470K	5%	1/16W	
R5079	1-218-724-11	METAL CHIP	22K	0.50%	1/16W	
R5080	1-218-330-11	METAL GLAZE	11K	5%	1/16W	
R5081	1-218-724-11	METAL CHIP	22K	0.50%	1/16W	
R5082	1-216-001-00	METAL CHIP	10	5%	1/10W	
R5083	1-216-833-11	METAL CHIP	10K	5%	1/16W	
R5084	1-216-833-11	METAL CHIP	10K	5%	1/16W	
R5085	1-216-828-11	METAL CHIP	3.9K	5%	1/16W	
R5086	1-216-864-11	METAL GLAZE	0	5%	1/16W	
R5087	1-216-864-11	METAL GLAZE	0	5%	1/16W	
R5091	1-218-708-11	METAL CHIP	4.7K	0.50%	1/16W	
R5092	1-218-724-11	METAL CHIP	22K	0.50%	1/16W	
R5093	1-216-860-11	METAL GLAZE	1.8M	5%	1/16W	
R5096	1-216-833-11	METAL CHIP	10K	5%	1/16W	
R5097	1-216-833-11	METAL CHIP	10K	5%	1/16W	
R5098	1-216-841-11	METAL CHIP	47K	5%	1/16W	
R5099	1-216-864-11	METAL GLAZE	0	5%	1/16W	
R5100	1-216-864-11	METAL GLAZE	0	5%	1/16W	
R5101	1-216-833-11	METAL CHIP	10K	5%	1/16W	
R5102	1-218-736-11	METAL CHIP	68K	0.50%	1/16W	
R5105	1-216-835-11	METAL CHIP	15K	5%	1/16W	
R5109	1-216-864-11	METAL GLAZE	0	5%	1/16W	
R5110	1-216-835-11	METAL CHIP	15K	5%	1/16W	
R5117	1-216-834-11	METAL CHIP	12K	5%	1/16W	
R5201	1-216-809-11	METAL CHIP	100	5%	1/16W	
R5202	1-216-821-11	METAL CHIP	1K	5%	1/16W	
R5206	1-216-295-00	METAL CHIP	0	5%	1/10W	
R5207	1-216-295-00	METAL CHIP	0	5%	1/10W	
R5208	1-218-708-11	METAL CHIP	4.7K	0.50%	1/16W	
R5209	1-216-845-11	METAL CHIP	100K	5%	1/16W	
R5210	1-216-845-11	METAL CHIP	100K	5%	1/16W	
R5212	1-216-849-11	METAL CHIP	220K	5%	1/16W	
R5213	1-216-830-11	METAL CHIP	5.6K	5%	1/16W	
R5114	1-216-864-11	METAL GLAZE	0	5%	1/16W	
R5116	1-216-864-11	METAL GLAZE	0	5%	1/16W	
R5118	1-216-864-11	METAL GLAZE	0	5%	1/16W	
R5200	1-216-864-11	METAL GLAZE	0	5%	1/16W	
R5203	1-216-864-11	METAL GLAZE	0	5%	1/16W	
R5216	1-216-864-11	METAL GLAZE	0	5%	1/16W	
R5217	1-216-864-11	METAL GLAZE	0	5%	1/16W	
R5218	1-216-864-11	METAL CHIP	0	5%	1/16W	
R5219	1-216-849-11	METAL CHIP	220K	5%	1/16W	
R5220	1-218-708-11	METAL CHIP	4.7K	0.50%	1/16W	
R5223	1-216-821-11	METAL CHIP	1K	5%	1/16W	
R8001	1-216-857-11	METAL CHIP	1M	5%	1/16W	
R8002	1-216-845-11	METAL CHIP	100K	5%	1/16W	
R8003	1-216-821-11	METAL CHIP	1K	5%	1/16W	
R8004	1-216-841-11	METAL CHIP	47K	5%	1/16W	
R8005	1-216-863-11	METAL GLAZE	3.3M	5%	1/16W	
R8006	1-216-853-11	METAL CHIP	470K	5%	1/16W	
R8007	1-216-821-11	METAL CHIP	1K	5%	1/16W	
R8008	1-216-819-11	METAL CHIP	680	5%	1/16W	
R8009	1-216-845-11	METAL CHIP	100K	5%	1/16W	
R8041	1-216-841-11	METAL CHIP	47K	5%	1/16W	

< VARIABLE RESISTOR >

RV501	1-238-089-11	RES, ADJ, CERMET 4.7K
RV502	1-238-091-11	RES, ADJ, CERMET 22K
RV503	1-238-090-11	RES, ADJ, CERMET 10K
RV504	1-238-090-11	RES, ADJ, CERMET 10K

Ref.No.	Part No.	Description			Remark
RV505	1-223-377-11	RES, ADJ, CERMET 100			
RV507	1-238-091-11	RES, ADJ, CERMET 22K			
RV508	1-238-091-11	RES, ADJ, CERMET 22K			
RV509	1-241-467-21	RES, ADJ, CERMET 100K			
RV510	1-238-089-11	RES, ADJ, CERMET 4.7K			
RV511	1-238-089-11	RES, ADJ, CERMET 4.7K			
RV512	1-238-089-11	RES, ADJ, CERMET 4.7K			
RV513	1-238-089-11	RES, ADJ, CERMET 4.7K			
RV514	1-238-091-11	RES, ADJ, CERMET 22K			
RV515	1-238-091-11	RES, ADJ, CERMET 22K			
RV516	1-238-092-11	RES, ADJ, CERMET 47K			
RV517	1-238-092-11	RES, ADJ, CERMET 47K			
RV519	1-238-091-11	RES, ADJ, CERMET 22K			
RV601	1-238-090-11	RES, ADJ, CERMET 10K			
RV602	1-238-090-11	RES, ADJ, CERMET 10K			
		< SWITCH >			
S801	1-572-467-31	SWITCH, PUSH (1 KEY)(EDIT)			
S802	1-572-694-21	SWITCH, KEY BOARD(REFLOW TYPE)			(CLOCK SET)
S803	1-572-467-31	SWITCH, PUSH (1 KEY)(REC)			
		< THERMISTOR >			
TH301	1-809-990-21	THERMISTOR NTH5G40B473K02TE			
TH302	1-809-990-21	THERMISTOR NTH5G40B473K02TE			
TH501	1-809-986-21	THERMISTOR NTH5G36B103K02TE			
		< VIBRATOR >			
X601	1-579-725-21	VIBRATOR, CRYSTAL (22MHz)			
X602	1-579-847-21	OSCILLATOR, CRYSTAL (55MHz)			
X801	1-579-709-11	VIBRATOR, CRYSTAL (32kHz)			
X802	1-579-846-21	VIBRATOR, CERAMIC (12MHz)			
**********					
*	A-3275-782-A	POWER BOARD COMPLETE (MD)			
		**********			
		< CAPACITOR >			
C401	1-164-346-11	CERAMIC CHIP	1uF		16V
C405	1-162-959-11	CERAMIC CHIP	330PF	5%	50V
C406	1-162-964-11	CERAMIC CHIP	0.001uF	10%	50V
C407	1-126-924-11	ELECT	330uF	20%	10V
C408	1-164-346-11	CERAMIC CHIP	1uF		16V
C410	1-104-813-91	TANTAL. CHIP	10uF	20%	16V
C412	1-164-004-11	CERAMIC CHIP	0.1uF	10%	25V
C414	1-135-237-11	TANTAL. CHIP	2.2uF	20%	16V
C415	1-104-813-91	TANTAL. CHIP	10uF	20%	16V
C416	1-135-264-21	TANTAL. CHIP	22uF	20%	10V
C418	1-162-970-11	CERAMIC CHIP	0.01uF	10%	25V
C421	1-164-315-11	CERAMIC CHIP	470PF	5%	50V

Ref.No.	Part No.	Description			Remark
C431	1-162-970-11	CERAMIC CHIP	0.01uF	10%	25V
C432	1-162-970-11	CERAMIC CHIP	0.01uF	10%	25V
C433	1-127-561-11	ELECT(SOLID)	33uF	20%	10V
C434	1-135-149-21	TANTALUM CHIP	2.2uF	20%	10V
C435	1-162-964-11	CERAMIC CHIP	0.001uF	10%	50V
C436	1-164-004-11	CERAMIC CHIP	0.1uF	10%	25V
C437	1-162-961-11	CERAMIC CHIP	330PF	10%	50V
C438	1-164-004-11	CERAMIC CHIP	0.1uF	10%	25V
C439	1-162-961-11	CERAMIC CHIP	330PF	10%	50V
C440	1-162-964-11	CERAMIC CHIP	0.001uF	10%	50V
C442	1-127-511-00	ELECT(SOLID)	6.8uF	20%	25V
C443	1-135-149-21	TANTALUM CHIP	2.2uF	20%	10V
C444	1-162-970-11	CERAMIC CHIP	0.01uF	10%	25V
C445	1-127-561-11	ELECT(SOLID)	33uF	20%	10V
C446	1-127-561-11	ELECT(SOLID)	33uF	20%	10V
C447	1-162-964-11	CERAMIC CHIP	0.001uF	10%	50V
C450	1-127-498-00	ELECT(SOLID)	15uF	20%	16V
C452	1-127-498-00	ELECT(SOLID)	15uF	20%	16V
C453	1-164-004-11	CERAMIC CHIP	0.1uF	10%	25V
C454	1-162-964-11	CERAMIC CHIP	0.001uF	10%	50V
C455	1-162-961-11	CERAMIC CHIP	330PF	10%	50V
C456	1-127-561-11	ELECT(SOLID)	33uF	20%	10V
C457	1-162-961-11	CERAMIC CHIP	330PF	10%	50V
C458	1-163-986-00	CERAMIC CHIP	0.027uF	10%	25V
C459	1-126-934-11	ELECT	220uF	20%	16V
C460	1-164-505-11	CERAMIC CHIP	2.2uF		16V
C461	1-164-505-11	CERAMIC CHIP	2.2uF		16V
		< CONNECTOR >			
CN402	1-573-343-21	CONNECTOR, BOARD TO BOARD 30P			
CN403	1-573-307-11	CONNECTOR, BOARD TO BOARD 14P			
CN404	1-573-335-11	CONNECTOR, BOARD TO BOARD 14P			
CN405	1-573-308-11	CONNECTOR, BOARD TO BOARD 16P			
CN406	1-573-336-11	CONNECTOR, BOARD TO BOARD 16P			
		< DIODE >			
D402	8-719-106-16	DIODE	RD6.8M-B1		
D404	8-719-991-65	DIODE	SB02W03C		
D405	8-719-974-51	DIODE	SB20-03P		
D407	8-719-974-51	DIODE	SB20-03P		
D410	8-719-988-78	DIODE	SB007W03Q		
D411	8-719-975-33	DIODE	RB110C		
D412	8-719-975-33	DIODE	RB110C		
D413	8-719-975-33	DIODE	RB110C		
D414	8-719-404-46	DIODE	MA110		
D415	8-719-975-33	DIODE	RB110C		
D416	8-719-975-33	DIODE	RB110C		
D417	8-719-975-33	DIODE	RB110C		
D418	8-719-023-69	DIODE	SB007T03Q		
D419	8-719-106-16	DIODE	RD6.8M-B1		

POWER (MD)

Ref.No.	Part No.	Description	Remark
		< IC >	
IC401	8-759-054-95	IC RF5C189	
IC402	8-759-990-43	IC TL1451ACDB	
IC403	8-759-168-33	IC S-81245PG-P5	
		< COIL >	
L401	1-410-626-11	COIL, CHOKE 47uH	
L402	1-412-039-51	INDUCTOR CHIP 100uH	
L403	1-410-626-11	COIL, CHOKE 47uH	
L404	1-410-627-11	COIL, CHOKE 100uH	
L405	1-410-627-11	COIL, CHOKE 100uH	
		< TRANSISTOR >	
Q403	8-729-923-45	TRANSISTOR 2SB1308-QR	
Q404	8-729-924-65	TRANSISTOR DTC123YU	
Q405	8-729-923-45	TRANSISTOR 2SB1308-QR	
Q406	8-729-924-65	TRANSISTOR DTC123YU	
Q407	8-729-923-45	TRANSISTOR 2SB1308-QR	
Q408	8-729-924-65	TRANSISTOR DTC123YU	
Q410	8-729-923-36	TRANSISTOR 2SD1963-Q.R	
Q411	8-729-120-28	TRANSISTOR 2SC1623-L5L6	
Q412	8-729-923-45	TRANSISTOR 2SB1308-QR	
Q413	8-729-120-28	TRANSISTOR 2SC1623-L5L6	
Q414	8-729-905-12	TRANSISTOR DTA144EU	
Q415	8-729-922-10	TRANSISTOR 2SA1577-QR	
Q416	8-729-905-15	TRANSISTOR DTC144WU	
Q420	8-729-905-12	TRANSISTOR DTA144EU	
Q421	8-729-923-45	TRANSISTOR 2SB1308-QR	
Q422	8-729-907-00	TRANSISTOR DTC114EU	
Q423	8-729-905-12	TRANSISTOR DTA144EU	
Q426	8-729-806-75	TRANSISTOR 2SB1120	
Q428	8-729-120-28	TRANSISTOR 2SC1623-L5L6	
Q429	8-729-806-75	TRANSISTOR 2SB1120	
Q430	8-729-120-28	TRANSISTOR 2SC1623-L5L6	
Q431	8-729-120-28	TRANSISTOR 2SC1623-L5L6	
Q432	8-729-120-28	TRANSISTOR 2SC1623-L5L6	
Q433	8-729-120-28	TRANSISTOR 2SC1623-L5L6	
Q434	8-729-120-28	TRANSISTOR 2SC1623-L5L6	
Q435	8-729-907-00	TRANSISTOR DTC114EU	
Q436	8-729-117-32	TRANSISTOR 2SC4177	
		< RESISTOR >	
R401	1-216-033-00	METAL CHIP 220 5% 1/10W	
R403	1-216-815-11	METAL CHIP 330 5% 1/16W	
R404	1-216-864-11	METAL CHIP 0 5% 1/16W	
R405	1-216-821-11	METAL CHIP 1K 5% 1/16W	
R406	1-216-823-11	METAL CHIP 1.5K 5% 1/16W	
R407	1-216-833-11	METAL CHIP 10K 5% 1/16W	
R408	1-216-041-00	METAL CHIP 470 5% 1/10W	
R409	1-217-671-11	METAL CHIP 1 5% 1/10W	
R410	1-217-671-11	METAL CHIP 1 5% 1/10W	
R411	1-216-817-11	METAL CHIP 470 5% 1/16W	
R413	1-216-829-11	METAL CHIP 4.7K 5% 1/16W	
R414	1-216-833-11	METAL CHIP 10K 5% 1/16W	
R415	1-216-831-11	METAL CHIP 6.8K 5% 1/16W	
R418	1-216-833-11	METAL CHIP 10K 5% 1/16W	
R419	1-216-857-11	METAL CHIP 1M 5% 1/16W	
R421	1-216-033-00	METAL CHIP 0 5% 1/16W	
R422	1-216-037-00	METAL CHIP 330 5% 1/10W	
R424	1-216-836-11	METAL CHIP 18K 5% 1/16W	
R425	1-216-833-11	METAL CHIP 10K 5% 1/16W	
R426	1-216-825-11	METAL CHIP 2.2K 5% 1/16W	
R427	1-216-845-11	METAL CHIP 100K 5% 1/16W	
R428	1-216-821-11	METAL CHIP 1K 5% 1/16W	
R429	1-216-833-11	METAL CHIP 10K 5% 1/16W	
R430	1-216-833-11	METAL CHIP 10K 5% 1/16W	
R431	1-217-671-11	METAL CHIP 1 5% 1/10W	
R432	1-216-857-11	METAL CHIP 1M 5% 1/16W	
R433	1-217-671-11	METAL CHIP 1 5% 1/10W	
R434	1-216-833-11	METAL CHIP 10K 5% 1/16W	
R435	1-216-835-11	METAL CHIP 15K 5% 1/16W	
R436	1-216-833-11	METAL CHIP 10K 5% 1/16W	
R437	1-216-833-11	METAL CHIP 10K 5% 1/16W	
R438	1-216-821-11	METAL CHIP 1K 5% 1/16W	
R439	1-216-821-11	METAL CHIP 1K 5% 1/16W	
R440	1-216-833-11	METAL CHIP 10K 5% 1/16W	
R442	1-216-841-11	METAL CHIP 47K 5% 1/16W	
R443	1-216-825-11	METAL CHIP 2.2K 5% 1/16W	
R445	1-216-815-11	METAL CHIP 330 5% 1/16W	
R446	1-216-031-00	METAL CHIP 180 5% 1/10W	
R447	1-216-833-11	METAL CHIP 10K 5% 1/16W	
R448	1-216-821-11	METAL CHIP 1K 5% 1/16W	
R449	1-216-821-11	METAL CHIP 1K 5% 1/16W	
R450	1-216-828-11	METAL CHIP 3.9K 5% 1/16W	
R451	1-216-825-11	METAL CHIP 2.2K 5% 1/16W	
R452	1-216-833-11	METAL CHIP 10K 5% 1/16W	
R453	1-216-857-11	METAL CHIP 1M 5% 1/16W	
R454	1-216-033-00	METAL CHIP 220 5% 1/10W	
R455	1-216-833-11	METAL CHIP 10K 5% 1/16W	
R456	1-216-821-11	METAL CHIP 1K 5% 1/16W	
R457	1-216-823-11	METAL CHIP 1.5K 5% 1/16W	
R458	1-216-833-11	METAL CHIP 10K 5% 1/16W	
R459	1-216-833-11	METAL CHIP 10K 5% 1/16W	
R460	1-216-821-11	METAL CHIP 1K 5% 1/16W	
R461	1-216-829-11	METAL CHIP 4.7K 5% 1/16W	
R462	1-216-833-11	METAL CHIP 10K 5% 1/16W	
R463	1-216-829-11	METAL CHIP 4.7K 5% 1/16W	
R464	1-216-833-11	METAL CHIP 10K 5% 1/16W	
R465	1-216-833-11	METAL CHIP 10K 5% 1/16W	
R466	1-216-825-11	METAL CHIP 2.2K 5% 1/16W	

Ref. No.	Part No.	Description			Remark
R467	1-216-031-00	METAL CHIP	180	5% 1/10W	
R468	1-216-836-11	METAL CHIP	18K	5% 1/16W	
R469	1-216-857-11	METAL CHIP	1M	5% 1/16W	
R470	1-216-821-11	METAL CHIP	1K	5% 1/16W	
R471	1-216-821-11	METAL CHIP	1K	5% 1/16W	
R472	1-216-864-11	METAL CHIP	0	5% 1/16W	
R473	1-216-833-11	METAL CHIP	10K	5% 1/16W	
R474	1-216-864-11	METAL CHIP	0	5% 1/16W	
R476	1-216-799-11	METAL CHIP	15	5% 1/16W	
R477	1-216-833-11	METAL CHIP	10K	5% 1/16W	
R478	1-216-841-11	METAL CHIP	47K	5% 1/16W	
R479	1-216-841-11	METAL CHIP	47K	5% 1/16W	
R481	1-216-828-11	METAL CHIP	3.9K	5% 1/16W	
		< VARIABLE RESISTOR >			
RV401	1-238-089-11	RES, ADJ, CERMET	4.7K		
RV402	1-238-088-11	RES, ADJ, CERMET	2.2K		
RV403	1-238-089-11	RES, ADJ, CERMET	4.7K		
RV405	1-238-090-11	RES, ADJ, CERMET	10K		
RV406	1-238-090-11	RES, ADJ, CERMET	10K		
**********					
*	1-648-595-12	PTOC BOARD			
		**********			
		< CAPACITOR >			
C691	1-135-264-21	TANTALUM CHIP	22uF	20% 10V	
C692	1-135-181-21	TANTALUM CHIP	4.7uF	20% 6.3V	
C693	1-135-181-21	TANTALUM CHIP	4.7uF	20% 6.3V	
		< DIODE >			
D691	8-719-941-09	DIODE	DAP202U		
D692	8-719-404-46	DIODE	MA110		
D693	8-719-404-46	DIODE	MA110		
		< IC >			
IC691	8-759-035-90	IC	SC7S02F		
IC692	8-759-082-57	IC	TC7W04FU		
		< RESISTOR >			
R691	1-216-849-11	METAL CHIP	220K	5% 1/16W	
R692	1-216-849-11	METAL CHIP	220K	5% 1/16W	
R693	1-216-833-11	METAL CHIP	10K	5% 1/16W	
R694	1-216-845-11	METAL CHIP	100K	5% 1/16W	
**********					

Ref. No.	Part No.	Description	Remark
		MISCELLANEOUS	
		**********	
2	1-466-988-11	SWITCH UNIT	
7	1-452-419-21	MAGNET	
67	1-751-129-11	WIRE, PARALLEL (FFC) (17 CORE)	
152	1-645-919-11	RELAY (A) FLEXIBLE BOARD	
161	1-466-923-11	SWITCH UNIT (MIC)	
⚠215	A-3263-173-A	OP BLOCK ASSY (KMS-130B)	
230	1-466-925-11	SWITCH UNIT (DETECTION)	
ANT1	1-501-530-11	ANTENNA, TELESCOPIC	
⚠F901	1-532-506-51	FUSE (T6.3A) (AEP, UK, G, IT)	
⚠F901	1-576-193-11	FUSE (6.3A) (US, Canadian)	
⚠F902	1-576-104-11	FUSE (2A) (US, Canadian)	
⚠T901	1-423-772-11	TRANSFORMER, POWER (US, Canadian)	
⚠T901	1-697-020-11	TRANSFORMER, POWER (UK)	
⚠T901	1-697-021-11	TRANSFORMER, POWER (AEP, G, IT)	
M701	1-698-007-12	MOTOR (SPINDLE)	
M702	1-698-008-11	MOTOR, DC (SLED)	
M703	1-698-035-11	MOTOR, DC (LOADING)	
SP101	1-504-415-11	SPEAKER (L-CH) (AEP, UK, G, IT)	
SP101	1-544-653-11	SPEAKER (8CM) (L-CH) (US, Canadian)	
SP201	1-504-415-11	SPEAKER (R-CH) (AEP, UK, G, IT)	
SP201	1-544-653-11	SPEAKER (8CM) (R-CH) (US, Canadian)	
**********			
		ACCESSORIES & PACKING MATERIALS	
		**********	
	1-501-567-21	ANTENNA, LOOP (LW/MW/SW)	
⚠	1-575-131-11	CORD, POWER (AEP, G, IT)	
⚠	1-590-147-11	CORD, POWER (Canadian)	
⚠	1-690-952-11	CORD, POWER (US)	
⚠	1-751-214-11	CORD, POWER (UK)	
	3-334-173-01	SHEET, PROTECTION	
*	3-388-638-01	CUSHION (A)	
*	3-388-639-01	CUSHION (B)	
	3-756-238-11	MANUAL, INSTRUCTION (ENGLISH, FRENCH, GERMAN, SPANISH) (AEP, UK, G)	
	3-756-238-21	MANUAL, INSTRUCTION (ENGLISH) (US, Canadian)	
	3-756-238-31	MANUAL, INSTRUCTION (FRENCH) (Canadian)	
	3-756-238-41	MANUAL, INSTRUCTION (DUTCH, SWEDISH, ITALIAN, PORTUGUESE) (AEP, IT)	
*	3-905-201-01	INDIVIDUAL CARTON	
*	4-941-548-01	LABEL, CLASS (1) (AEP, UK, G, IT)	
	8-916-736-90	REMOTE COMMANDER RMT-CM1/1 SET (US, Canadian)	
	8-916-736-95	REMOTE COMMANDER RMT-CM1/2 SET (AEP, UK, G, IT)	
**********			

The components identified by mark ⚠ or dotted line with mark ⚠ are critical for safety. Replace only with part number specified.	Les composants identifiés par une marque ⚠ sont critiques pour la sécurité. Ne les remplacer que par une piéce portant le numéro spécifié.

Ref. No.	Part No.	Description	Remark
		**********	
		HARDWARE LIST	
		**********	
#1	7-685-647-79	SCREW +BVTP 3X10 TYPE2 IT-3	
#2	7-685-645-79	SCREW +BVTP 3X6 TYPE2 IT-3	
#3	7-621-775-20	SCREW +BVTT 2.6X5 (S)	
#4	7-685-648-79	SCREW +BVTP 3X12 TYPE2 IT-3	
#5	7-682-903-19	SCREW +PWH 3X6	
#6	7-685-903-21	SCREW +PWH 3X8	
#7	7-627-852-37	PRECISION SCREW +P1.7X1.8TYPE3	
#8	7-685-850-04	SCREW +BVTT 2X3 (S)	
#9	7-685-870-04	SCREW +BVTT 3X5 (S)	
#10	7-623-422-07	LW 3, TYPE B	
#11	7-682-547-09	SCREW +BVTT 3X6 (S) (AEP, UK, G, IT)	
#12	7-685-861-01	SCREW +BVTT 2.6X5 (S)	

9-957-589-11

Sony Corporation
General Audio Group

English
93E0991-1
Printed in Japan
© 1993.5
Published by Audio Sector Quality Assurance Dept.